02

ENGLISH

auLika

Type SUP040R

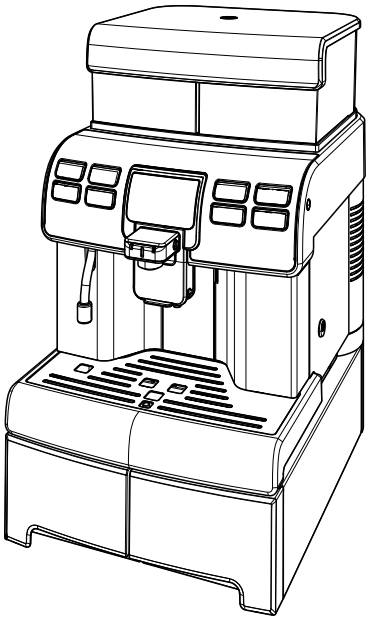

EN

02

OPERATING INSTRUCTIONS

Read these instructions carefully before using the machine.

CE

Saeco

Saeco

1

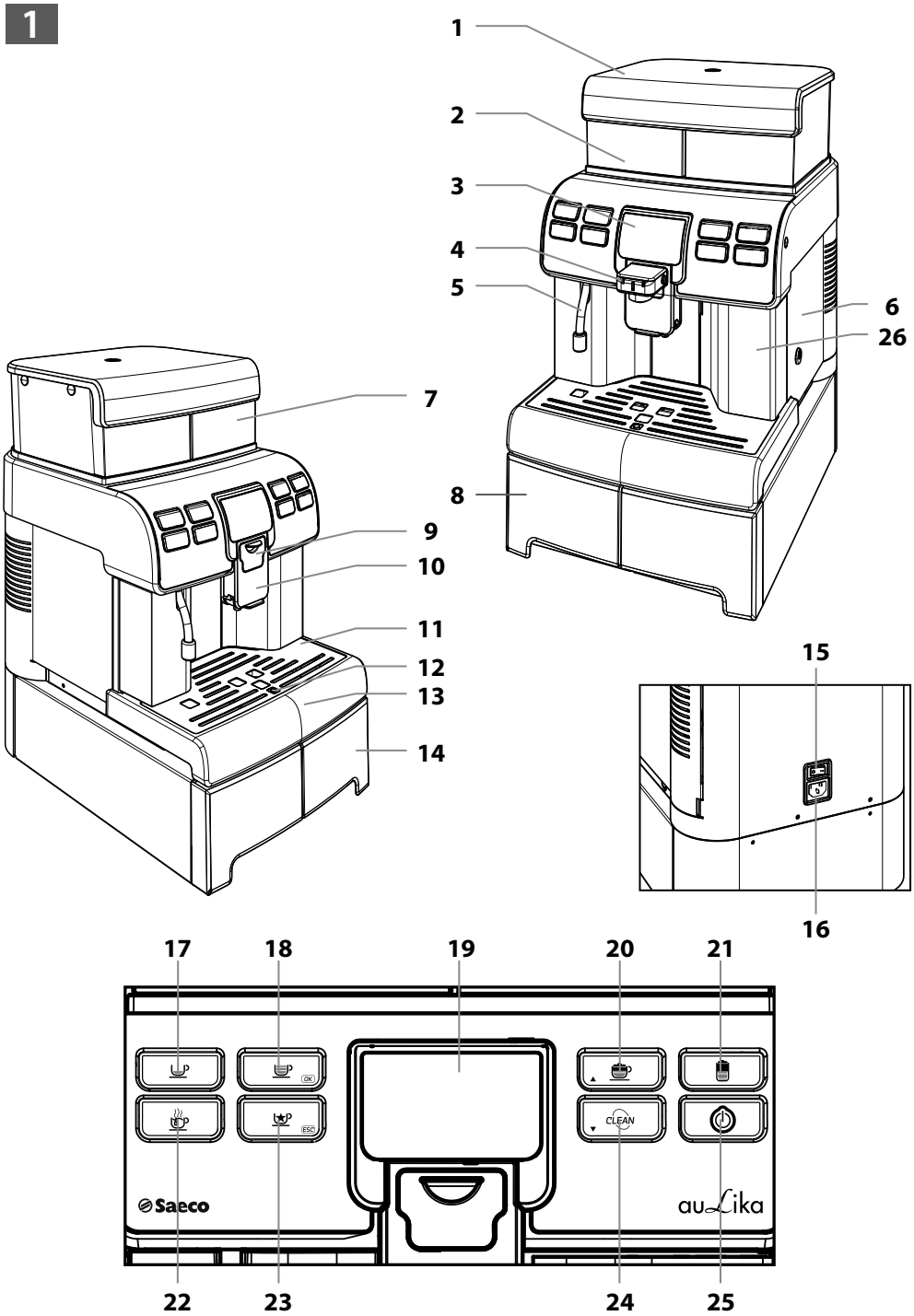
1
2
3
4
5
6
26
7
8
9
10
11
12
13
14
15
16
17
18
19
20
21
22
23
24
25
OK
ESC
CLEAN
Saeco
auLika

Saeco

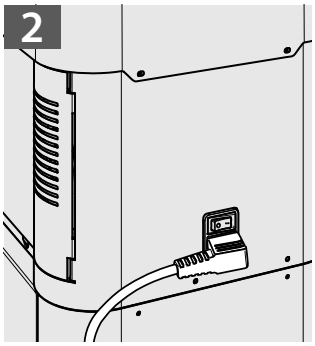

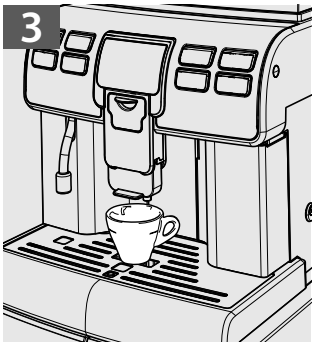

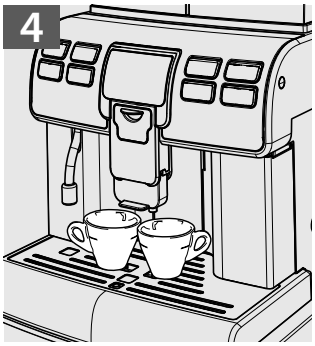

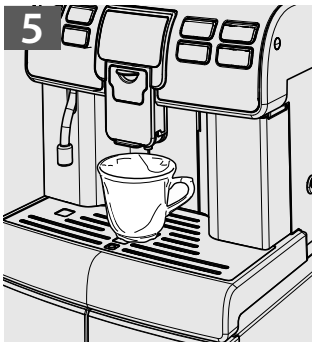

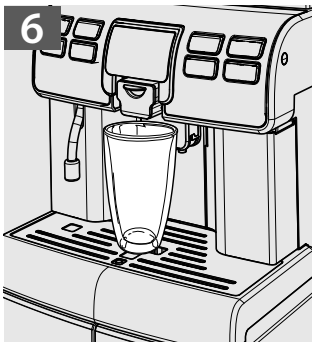

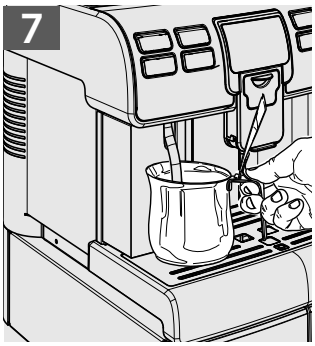

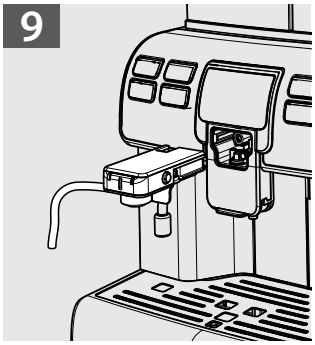

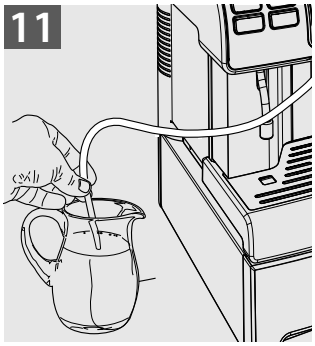

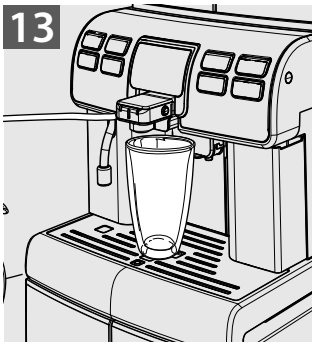

SAFETY REGULATIONS

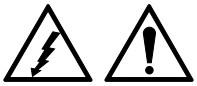

Never allow water to come into contact with any of the electrical parts of the machine: Danger of short circuit! Hot water and steam may cause burning!

Intended Use

The machine is intended to be used in small offices/organisations only.

The appliance is not to be used by persons (including children) with reduced physical, mental or sensory abilities or with scarce experience and/or expertise, unless they are supervised by a person responsible for their safety, or they are instructed by this person on how to properly use the machine.

Power Supply

The machine must be connected to the power supply by the service provider, in accordance with its specifications.

Power Cord

Never use the machine if the power cord is defective.

Report any defects in the cord and/or plug to the service provider immediately. Do not pass the power cord around corners, over sharp edges or over hot objects and keep it away from oil. Do not use the power cord to carry or pull the machine. Do not pull out the plug by the power cord nor touch it with wet hands or feet. Do not let the power cord hang freely from tables or shelves.

For the Safety of Others

Ensure that children cannot play with the machine and/or the packaging materials. Never direct the jet of hot water and/or steam towards yourself or others. Do not touch the hot water wand with bare hands. Always use the handles or knobs provided.

Danger of Burns

Do not touch the hot water wand and/or the coffee/product dispensing spout.

Fire Safety Precautions

In case of fire, use carbon dioxide (CO_2) extinguishers. Do not use water or dry powder extinguishers.

Suitable Location for Operation and Maintenance

The machine should be installed by the service provider in accordance with the safety regulations in force at the time of installation.

The machine may only be moved by the service provider.

Do not use the machine outdoors.

Avoid placing open flames and/or incandescent objects near the machine in order to avoid melting or other damage to the machine housing. Do not use in places where the temperature may drop to a level equal to and/or lower than 0°C. If the machine has been exposed to

such conditions alert the service provider, who will carry out a safety check.

Cleaning

Before cleaning the machine, the power button must be switched to OFF (0) and the plug must be removed from the power socket. Wait also for the machine to cool down. Never immerse the machine in water! It is strictly forbidden to tamper with the internal parts of the machine. Do not clean the machine using a jet of water.
The appliance and its components must be cleaned and washed following a period of inactivity.

Using Milk

Milk must be used and stored in accordance with the instructions given on the manufacturer's original packaging.
We accept no liability for use of milk unsuitable for human consumption.
Milk must be kept cold, as high temperatures make it become acid - this is a natural characteristic of milk. For this reason, the Cappuccinatore must be cleaned after each use, as described in the manual.
For thorough cleaning, the Cappuccinatore can be detached and disassembled, and its parts can be put in a dishwasher (not professional type).
The washing process in the dishwasher may cause the surface of the Cappuccinatore parts to tarnish or the graphics to fade, especially if aggressive detergents are used.
This is a normal phenomenon and does not affect in any way the correct operation of the milk system.

Storing the Machine

If the machine is to remain inactive for a long time, turn it off and unplug it. Store the machine in a dry place, out of the reach of children. Keep it protected from dust and dirt.

Repairs / Maintenance

In case of failure, problems or a suspected fault resulting from a fall, immediately remove the plug from the power socket and alert the service provider or specialised technician.
Never attempt to operate the machine if it is faulty. Only the service provider and/or technician may carry out servicing operations and repairs on the machine.

Saeco

CONTENTS

1 GENERAL INFORMATION 7
1.1 Intended Use of the Machine 7
1.2 To Simplify Manual Reading.....7
1.3 How to Use these Operating Instructions 7
1.4 Machine Identification.....7
1.5 Technical Specifications 8
1.6 Residual Risks 8

2 MACHINE COMPONENTS 8
2.1 Control Panel Description 9

3 USING THE MACHINE 9
3.1 Switching on the Machine 9
3.2 Warm-up and Rinsing.....10
3.3 Rinse/Self-Cleaning Cycle.....10
3.4 Eco-friendly: Stand-by 10
3.5 Adjusting the Dispensing Spout.....10
3.6 Coffee Brewing 11
3.7 Emptying the Coffee Grounds Drawer 11
3.8 Brewing a Cappuccino 12
3.9 Latte Macchiato 12
3.10 Dispensing Hot Water.....13
3.11 "SPECIAL" Products 13

4 USING THE MACHINE WITH CREDITS 15

5 CLEANING AND MAINTENANCE..... 15
5.1 Cleaning the Hot Water / Steam Wand 15
5.2 Cleaning the Coffee Grounds Drawer.....16
5.3 Cleaning the Drip Tray 16
5.4 Cleaning the Cappuccinatore (After Each Use).....16

6 MACHINE WARNINGS 18

7 HANDLING AND STORAGE 20
7.1 Handling.....20
7.2 Storage 20

8 INSTALLATION 20
8.1 Safety Regulations 20
8.2 Stop Functions 21
8.3 List of Accessories Supplied.....21
8.4 Assembly-Siting.....22
8.5 Disposal of Packaging 22
8.6 Installing the Container Base 22
8.7 Opening the Upper Lid.....23
8.8 Filling the Water Tank.....24
8.9 Filling the Coffee Bean Hopper.....24
8.10 Closing the Upper Lid.....25
8.11 Electrical Connection.....25
8.12 Setting the Language (Upon First Use) 25
8.13 First Use - Use After a Long Period of Inactivity 26
8.14 Measuring and Adjusting Water Hardness 26
8.15 "INTENZA+" Water Filter 27
8.16 Adjusting the Coffee Grinder.....29
8.17 Adjusting the "Aroma" - Amount of Ground Coffee 30
8.18 Adjusting Brewed Products.....30

9 MACHINE PROGRAMMING 33
9.1 Accessing the Programming Mode.....33
9.2 Programming Controls.....34
9.3 Credits Menu.....35
9.4 Beverage Menu.....36
9.5 Machine Menu.....38
9.6 Setting the PASSWORD 42

10 CLEANING AND MAINTENANCE..... 43
10.1 Cleaning Intervals.....43
10.2 Cleaning the Water Tank 43
10.3 Thorough Cleaning of the Cappuccinatore 43
10.4 Brew Group - Weekly Cleaning.....45
10.5 Cleaning the Brew Group with “Coffee Clean Tablets”.46
10.6 Brew Group Lubrication 48
10.7 Descaling 49

11 MACHINE DISPOSAL 52

12 TROUBLESHOOTING 53

1 GENERAL INFORMATION

1.1 Intended Use of the Machine

This machine automatically brews:
- Coffee and espresso coffee using coffee beans;
- Hot beverages using hot water dispensed via the steam wand;
- Milk-based beverages using the supplied Cappuccinatore.

The structure of the machine and its elegant housing have been designed for use in small offices, businesses and institutions.

Important.
Misuse voids all forms of warranty, releasing the Manufacturer from any responsibility for damage to persons and/or property.
The following are considered misuse:
- **Any use other than the intended use and/or employing methods other than those described in this manual;**
- **Any operation on the machine in breach of the instructions provided in this manual;**
- **Any use following tampering with machine components and/or alteration of its safety mechanisms;**
- **Use of the machine outdoors.**

In such cases the user shall bear the costs of repair.

1.2 To Simplify Manual Reading

Various kinds of symbols are used in this manual to highlight the different hazard or competence levels.

The warning triangle indicates important instructions for the safety of the machine's users. Carefully follow these instructions to avoid serious injury!

Various symbols are used in this manual to indicate the competences of each user.

User:

A person who uses the machine to brew beverages and who can clean the machine, where instructed to do so in the manual. Users are NOT allowed to perform operations which are the competence of the Service Provider/Supply Operator or Technician. On detecting machine malfunctions and/or faults, users should contact the Service Provider only.

Service Provider/Supply Operator:

Company or person responsible for normal machine installation, start-up and suspension of service. On detecting machine malfunctions, the service provider should request the assistance of the maintenance technician.

Technician:

Personnel qualified to perform unscheduled maintenance operations and provide assistance with the machine.
Technicians may carry out all operations described in this manual without requiring explicit authorisation.

This symbol is used to highlight information that is particularly important to ensure optimal use of the machine.

1.3 How to Use these Operating Instructions

This manual constitutes an integral part of the machine, and should be read carefully. It contains information regarding installation, maintenance and proper use of the machine.
Always refer to this manual before carrying out any operation.

Keep these operating instructions in a safe place and make them available to anyone who may use the coffee machine. If this manual is lost or damaged, a copy should be requested from the service provider immediately. For further information or if you experience problems not completely or sufficiently covered in these instructions, please contact the service provider.

1.4 Machine Identification

The machine is identified by the model name and serial number shown on the special plate.
The plate contains the following information:
- Name of the Manufacturer
- CE marking
- Machine model
- Serial number
- Manufacturing year
- Some technical specifications:
  - Power supply voltage (V);
  - Power supply frequency (Hz);
  - Electrical power consumption (W).

Note: When contacting the Service Provider, always refer to this plate, and to the machine's specific data shown on it.

1.5 Technical Specifications

Technical Specifications
Power Supply and Nominal Voltage-Power Rating See plate attached to the back of the appliance
Machine Housing Material metal - thermoplastic material
Size (w x h x d) 334 x 574 x 452 (mm)
Weight approx. 22 kg
Power Cord Length 1.2 m
Water Tank Capacity 4.0 litres
Coffee Grounds Drawer Capacity 40 grounds
Control Panel On the front
A-weighted Sound Pressure Level: Less than 70 dB
Pump Pressure Max. 1.5 MPa (15.0 bar)
Water Connections (for water network version only) maximum pressure 0.8 MPa (8 bar) minimum pressure 0.15 MPa (1.5 bar)
Operating Conditions Minimum temperature: above 10°C Maximum temperature: below 40°C Maximum humidity: below 95%
Safety Devices Boiler pressure safety valve Safety thermostat

Subject to engineering and manufacturing changes due to technological improvements.

1.6 Residual Risks

The dispensing outlet has no guards to prevent accidental hand contact with coffee, hot beverages and/or steam.

2 MACHINE COMPONENTS

Note: The "key to components" includes all machine models; check which one matches your machine. Certain functions may not be available.

1 Tank lid with lock
2 Water tank
3 Control panel
4 Cappuccinatore
5 Hot water / steam wand
6 Service compartment access door (to be used by the Service provider only)
7 Coffee bean hopper
8 Accessory drawer
9 Cappuccinatore compartment cover
10 Dispensing spout
11 Cup holder grill
12 Full drip tray float
13 Drip tray
14 Coffee grounds drawer
15 ON/OFF button
16 Chassis plug
17 "Espresso" button
18 "Coffee" button
19 Display
20 "Cappuccino" button
21 "Latte Macchiato" button
22 "Hot Water" button
23 "Special Beverages" button
24 "Cappuccinatore Cleaning Cycle" button
25 "Stand-by" button
26 Group compartment drawer

2.1 Control Panel Description

Note: All possible controls are described here. Refer to the following sections for the operating modes.

Some buttons in the control panel have a double function. The double function is only activated in certain moments during the machine operation or when accessing the programming mode. The additional function is indicated by the icon under the machine button.

Button - Description
17 "Espresso" button When this button is pressed an espresso cup is brewed.
18 "Coffee" button - 2nd Function (OK) When this button is pressed a coffee cup is brewed. **2nd Function -** Press it to select the displayed option.
19 LCD Display Displays the machine status and alarm signals, and guides the user through the steps required to operate the machine.
20 "Cappuccino" button - 2nd Function (▲) When this button is pressed a cappuccino cup is brewed. **2nd Function** - Press it to scroll the current page selection up.
21 "Latte Macchiato" button When this button is pressed a latte macchiato cup is dispensed.
22 "Hot Water" button When this button is pressed hot water is dispensed.
23 "Special Beverages" button - 2nd Function (ESC) When this button is pressed, the menu for preparing other types of beverages is accessed. **2nd Function** - Press it to exit the selected page and/or to stop the beverage brewing procedure.
24 "Clean" button - 2nd Function (▼) When this button is pressed, the machine starts an automatic quick cleaning cycle of the Cappuccinatore. **2nd Function** - Press it to scroll the current page selection down.
25 "Stand-by" button When this button is pressed, the machine Stand-by mode is activated.

3 USING THE MACHINE

Before start using the machine check that the water tank and the coffee bean hopper are filled and that the machine is properly clean.

3.1 Switching on the Machine

Warning! Connection to the power supply should be carried out exclusively by the service provider! Ensure that the upper lid (1) is always locked.

Before switching on the machine, ensure that the plug is correctly inserted in the power socket.

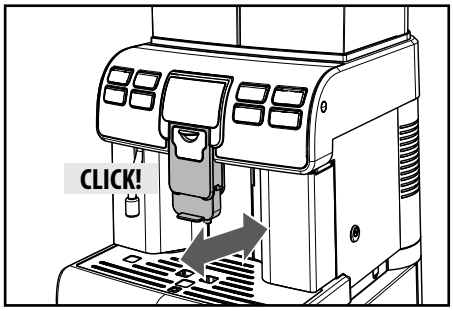

Ensure that the dispensing spout is in correct position. Move it horizontally until you hear the CLICK indicating correct positioning. If this is not done, some product might leak out of the dispensing spout.

1 To switch on the machine, move the power button on the back of the machine to "I" **(Fig.02, page 3)**.

2 After carrying out a check cycle, the machine goes into stand-by mode and the "⏻" button (25) blinks.

3 To turn on the machine simply press the "⏻" button (25).

Note: Once the warm-up is complete, the machine primes the circuit and performs a rinse cycle of the internal circuits. A small amount of water is dispensed during this process. Wait for this cycle to be completed.

3.2 Warm-up and Rinsing

1 Upon start-up, the machine activates the warm-up phase. Wait until it is completed.

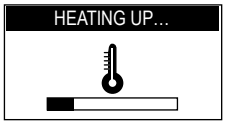

Note: The bar is in progress to show that the machine is heating up the system.

2 Once the warm-up is complete, the machine performs a rinse cycle of the internal circuits.

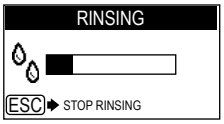

Note: The bar is in progress to show that the machine is performing the rinse cycle of the system.

3 A small amount of water is dispensed. Wait for the cycle to end.

Note: The cycle can be stopped by pressing the "" button (23).

4 Then, the machine is ready for use.

The logo is displayed indicating that the machine is ready for use.

Note: If the machine is being used for the first time or after a long period of inactivity, contact the Service Provider to start it up.

3.3 Rinse/Self-Cleaning Cycle

This cycle enables rinsing the internal coffee circuits with fresh water. The cycle is carried out:

- At machine start-up (with cold boiler);
- After priming the circuit (with cold boiler);
- During the stand-by preparation phase (if at least one coffee-based product has been brewed);
- When turning off the machine, after pressing the "" button (25) (if at least one coffee-based product has been brewed).

A small amount of water will be dispensed to rinse and heat all the machine parts; in this phase this icon is displayed.

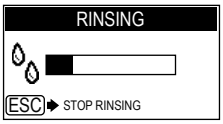

Wait for the cycle to finish automatically. The dispensing process can be stopped by pressing the "" button (23).

3.4 Eco-friendly: Stand-by

The machine is designed for energy saving. The machine automatically turns off after 30 minutes of inactivity.

Note:

- **During the turning off phase, the machine performs a rinse cycle, if a coffee product has been brewed.**
- **Time can be programmed according to your needs (contact the Service Provider).**

To turn the machine on again, simply press either button on the control panel (if the power button is set to "I"). In this case the machine will go through the rinse cycle only if the boiler is cold.

3.5 Adjusting the Dispensing Spout

Most of the cups on the market can be used with this coffee machine.
The height of the dispensing spout may be adjusted to better fit the dimensions of the cups that you wish to use.

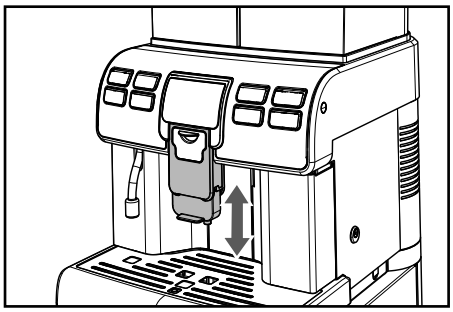

Manually move the dispensing spout up or down to adjust its height.

The recommended positions are:

- When using small cups **(Fig.03, page 3)**;
- When using large cups **(Fig.05, page 3)**.

Two cups can be placed under the dispensing spout to brew two cups of coffee at the same time **(Fig.04, page 3).**

If you want to use tall glasses or mugs, push the dispensing spout to its limit stop. In this case, you can brew only one product at a time. **(Fig.06, page 3)**.

Note: Before brewing any product and/or when bringing the dispensing spout back to its normal brewing position, ensure that it is correctly positioned. This can be noted through the CLICK indicating correct positioning.

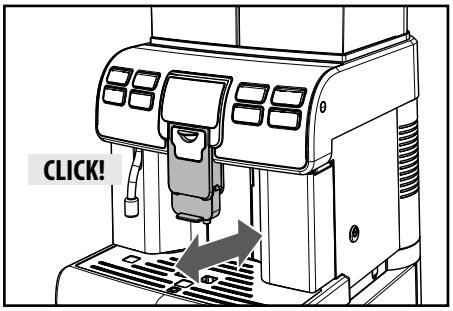

If this is not done, some product might leak out of the dispensing spout.

3.6 Coffee Brewing

To brew coffee, press and release:

1 The " " button (17) for a cup of espresso coffee,
or
the " " button (18) for a cup of coffee.

The brewing cycle then starts:
Press the desired button once to brew 1 cup of coffee.
Press the desired button twice consecutively to brew 2 cups of coffee.

Note: To brew 2 cups of coffee, the machine automatically grinds and doses the correct amount of coffee. Brewing two coffees requires two grinding cycles and two brewing cycles, which the machine carries out automatically.

2 Once the prebrewing cycle is complete, coffee begins to come out of the dispensing spout.

3 Coffee brewing stops automatically when the set level is reached. However, the coffee brewing process can be stopped by pressing the " " button (23).

Note: The machine is set to brew a true Italian espresso coffee. This feature may slightly lengthen the brewing time, allowing the intense coffee flavour to develop fully.

3.7 Emptying the Coffee Grounds Drawer

Note: This operation must be performed with the machine switched on and/or in stand-by mode.

The machine will indicate when the coffee grounds drawer has reached its maximum capacity.
The first warning alerts the user that the coffee grounds drawer must be emptied, but the machine can still be used to brew coffee; the display shows:

If the drawer is not emptied after several brewing cycles the machine will stop; the display shows:

In this case the machine does not allow coffee to be brewed.
In order to continue to brew coffee, the coffee grounds drawer must be emptied of used coffee.

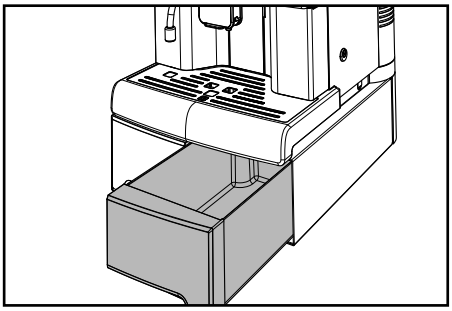

Remove the drawer and empty out the coffee grounds in a suitable container. Only when the display shows:

may the coffee grounds drawer be inserted into the machine. When inserting the drawer, the display shows:

The machine is now ready to brew coffee.

3.8 Brewing a Cappuccino

The machine allows a cappuccino to be brewed quickly and easily with the touch of a button.

Danger of burns! Brewing may be preceded by small jets of hot water.

Important Note: Clean the Cappuccinatore immediately after using it to froth milk (see section 5.4). Clean the suction hose externally with a damp cloth. This way, all parts will be perfectly clean and free of any milk residue. If this cycle is not carried out, 10 minutes after completion of the last brewing operation the machine suggests performing a cleaning cycle.

1 Remove the cover from the front side **(Fig.08, page 3)**.

Note: The cover can be placed on the machine side using the integrated magnet.

2 Insert the Cappuccinatore into its seat until it locks into place **(Fig.09-10, page 3)**. Check that it cannot slide away.

Warning: Before using the Cappuccinatore, clean it as described in section 5.4.

3 Insert the clean pipe directly into the milk container **(Fig.11, page 3)**.

Note: To ensure better results when preparing a cappuccino, use cold milk.

4 Place the cup under the dispensing spout **(Fig.12, page 3)**. Press the " " button (20).

5 The machine needs a preheating time.

6 After preheating, the machine starts brewing the cappuccino.

7 At this stage, the machine dispenses frothed milk. You can stop the dispensing process by pressing the " " button (23).

8 After dispensing milk, the machine brews coffee. You can stop the brewing process by pressing the " " button (23).

Enjoy your cappuccino like at the coffee bar.

9 After using the Cappuccinatore, clean it as described in section 5.4.

10 Remove the container and clean it if necessary.

3.9 Latte Macchiato

Important Note: Clean the Cappuccinatore immediately after using it to froth milk (see section 5.4). Clean the suction hose externally with a damp cloth. This way, all parts will be perfectly clean and free of any milk residue. If this cycle is not carried out, 10 minutes after completion of the last brewing operation the machine suggests performing a cleaning cycle.

The machine allows a cup of latte macchiato to be dispensed quickly and easily with the touch of a button.
To dispense a cup of latte macchiato perform all the steps described in section 3.8 up to step 4.

1 We recommend using tall glasses for this type of preparation, thus moving the dispensing spout accordingly **(Fig.13, page 3)**.

2 When the machine is ready, press the "" button (21) to start dispensing the latte macchiato.

3 The machine prepares the latte macchiato automatically.

4 After using the Cappuccinatore, clean it as described in section 5.4.

Remove the container and clean it if necessary.

3.10 Dispensing Hot Water

Dispensing may be preceded by short spurts of hot water. Risk of burning. The hot water wand may reach high temperatures.

1 Place a container under the hot water wand **(Fig.07, page 3)**.

2 Press the "" button (22) to start dispensing hot water through the wand.

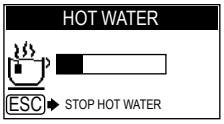

3 After dispensing, remove the container with hot water.

Note: You can stop the brewing process by pressing the "" button (23).

3.11 "SPECIAL" Products

The machine is designed to also brew products other than those displayed on the control panel.

Note: After pressing the "" button (23), if no product is selected, the machine goes back to the main menu after 10 seconds.

1 Press the "" button (23) to access the menu.

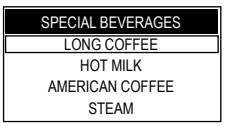

Note: The "STEAM" function is displayed and can be selected only if it has been previously activated by the service provider; otherwise, it is not available.

2 The display shows the page for "special" beverages.

Note: This menu enables only a single brewing process at a time. To brew more products repeat the described procedures.

3 Select the desired beverage by pressing the "" (20) or "CLEAN" (24) button.

4 When the desired beverage has been selected, press the "" button (18) to start the preparation.

Refer to the section relevant to the brewing of the desired beverage.

For the preparation of milk-based beverages, install the Cappuccinatore after washing it as described in section 5.4.

Long Coffee

This programme allows you to prepare a long coffee.

1 Press the "" button (23) to enter the menu.

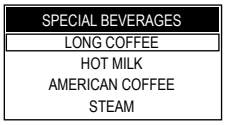

2 Place a suitable cup under the dispensing spout **(Fig.05, page 3)**.

3 Press the "" button (18) to start the preparation.

4 After brewing, remove the coffee cup.

Note: You can stop the brewing process by pressing the "" button (23).

Hot Milk

This programme allows you to prepare a hot milk.

Danger of burns! Dispensing may be preceded by small jets of hot water.

1 Remove the cover from the front side **(Fig.08, page 3)**.

2 Insert the complete Cappuccinatore into its seat until it locks into place **(Fig.09-10, page 3)**. Check that it cannot slide away.

3 Insert the clean pipe directly into the milk container **(Fig.11, page 3)**.

Note: To ensure better results, use cold milk.

4 Press the "★" button (23) to access the menu.

Press the "CLEAN" button (24) to select "HOT MILK".

SPECIAL BEVERAGES
LONG COFFEE
HOT MILK
AMERICAN COFFEE
STEAM

5 Place a suitable cup under the dispensing spout **(Fig.13, page 3)**.

6 Confirm by pressing the "☕" button (18) to start the preparation.

Note: You can stop the dispensing process by pressing the "★" button (23).

7 When the dispensing procedure is complete, remove the cup with milk.

After using the Cappuccinatore, clean it as described in section 5.4. If this cycle is not carried out, 10 minutes after completion of the last brewing operation the machine suggests performing a cleaning cycle.
Remove the container and clean it if necessary.

American Coffee

This programme allows you to prepare an American coffee.

1 Press the "★" button (23) to access the menu.

2 Press the "CLEAN" button (24) to select "AMERICAN COFFEE".

SPECIAL BEVERAGES
LONG COFFEE
HOT MILK
AMERICAN COFFEE
STEAM

3 Place a suitable cup under the dispensing spout **(Fig.5, page 3)**.

4 Confirm by pressing the "☕" button (18) to start the preparation.

5 After brewing, remove the coffee cup.

Note: You can stop the brewing process by pressing the "★" button (23).

Steam

Note: This function is only available if previously activated by the service provider.

Dispensing may be preceded by short spurts of hot water. Risk of burning. The steam wand may reach high temperatures.

This program allows steam to be dispensed in order to heat up the beverages directly in the container.

1 Press the "★" button (23) to access the menu.

2 Press the "CLEAN" button (24) to select "STEAM".

SPECIAL BEVERAGES
LONG COFFEE
HOT MILK
AMERICAN COFFEE
STEAM

3 Place a suitable container under the dispensing spout **(Fig. 7, page 3)**.

4 Press the "" button (18) to confirm.

5 The machine heats up the system. Once the required temperature is reached, the steam dispensing procedure is started.

6 To conclude the steam dispensing process, press the "" button (23).

Clean the steam wand with a wet cloth after use, if necessary.

4 USING THE MACHINE WITH CREDITS

Note:This option can be enabled or disabled by the service provider.

The machine is designed to manage beverage brewing by means of a credit system. The number of coffee-based products brewed is limited to the number of credits granted by the service provider. When no credits remain, no more coffee-based products can be brewed.

Available credits are displayed at each product brewing start.

Note: The dispensing of hot water, hot milk and steam is not subject to credit management; it can always be performed, provided that there is water in the tank.

Each service provider decides independently how to manage the granting and recharging of credits to allow the machine to be used.

5 CLEANING AND MAINTENANCE

As some of the parts of the appliance come in contact with water and coffee during normal use, it is important to clean the appliance regularly.

Not doing this will ultimately make the appliance stop working properly, and in this case repair is not covered under the warranty.

Warning! Before undertaking any maintenance and/or cleaning operation, turn off the machine, unplug it and wait for it to cool down.

Non-removable parts and the machine itself must be cleaned, when not otherwise specified, using only cold or lukewarm water, with a non-abrasive sponge and a damp cloth.

- Cleaning can only be carried out when the machine is cold and disconnected from the electric network.
- Use a soft, dampened cloth to clean the machine.
- Do not use direct jets of water.
- Do not immerse the machine in water or place any of its parts in a dishwasher.
- Do not use sharp objects or harsh chemical products (solvents) for cleaning.
- Do not dry the machine and/or its parts using a microwave and/or standard oven.
- All parts requiring cleaning are easily accessible, so no tools are needed.
- Periodic maintenance and cleaning will keep the machine in good working order for a longer time and ensure compliance with basic hygienic standards.

Warning! The machine and its parts must in any case be cleaned every week.

The appliance and its parts must be cleaned and washed following a period of inactivity

5.1 Cleaning the Hot Water / Steam Wand

The hot water/steam wand must be cleaned externally with a damp cloth after each use and, in any case, once a week.

Warning! Before performing this operation, make sure that the wand is cold: Danger of burns!

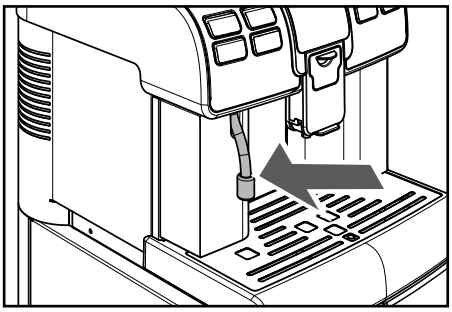

5.2 Cleaning the Coffee Grounds Drawer

The coffee grounds drawer must be emptied and cleaned whenever indicated by the machine. To carry out this operation, refer to section 3.7.

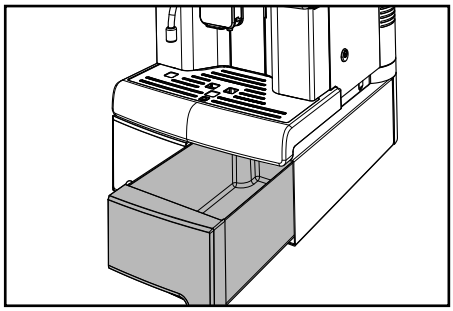

5.3 Cleaning the Drip Tray

Empty and clean the drip tray every day. Perform this operation also when the float is raised.

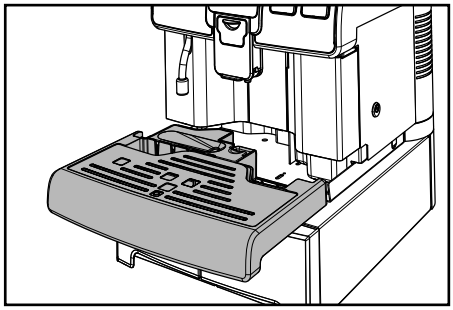

5.4 Cleaning the Cappuccinatore (After Each Use)

Warning! Failure to clean the Cappuccinatore after use with milk may cause proliferation of bacteria which may be harmful for the user.

The Cappuccinatore must be washed and cleaned every time it is used.
The lack of cleaning before and after each use can affect the correct operation of the machine.

Danger of burns! Dispensing may be preceded by small jets of hot water.

Perform a quick cleaning procedure as follows:

1 Ensure that the Cappuccinatore, complete with all its parts, is correctly inserted **(Fig.10, page 3)**.

2 Insert the suction hose in a carafe containing clean water **(Fig.11, page 3)**.

3 Place a container under the dispensing spout **(Fig.12, page 3)**.

4 With the machine on, press the "CLEAN" button (24).

CAPPUCCINATORE CLEANING
REPLACE MILK CONTAINER
WITH ANOTHER ONE WITH
FRESH WATER
ESC ➔ NO OK ➔ YES

5 Press the "" button (18) to start the Cappuccinatore cleaning cycle.

Note: To exit the cycle at any moment, press the "" button (23).

6 The machine heats up the system.

CAPPUCCINATORE CLEANING
PLEASE WAIT ...
ESC ➔ STOP CLEANING

Once the warm-up is complete, the machine performs an assisted wash cycle of the Cappuccinatore. Wait until the cycle is complete.

7 Only once the cycle is complete press the side buttons and remove the Cappuccinatore.

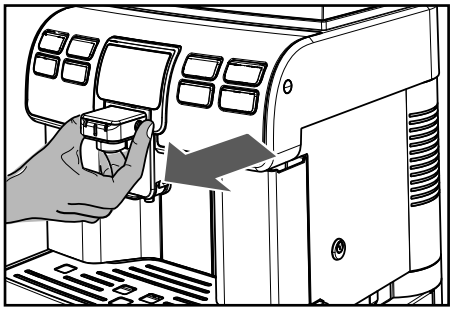

8 Place the cover back on the machine **(Fig.08, page 3)**.

Important Note: It is advisable to remove the Cappuccinatore from the machine when not being used, in order to keep it clean.

9 Remove the suction tube from the Cappuccinatore.

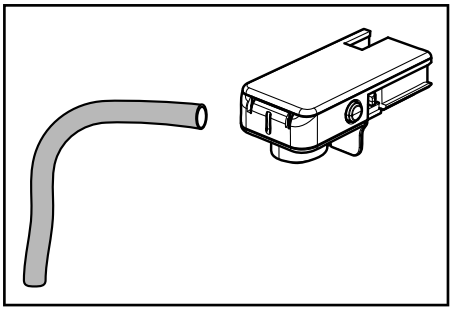

10 Remove the ring from the Cappuccinatore.

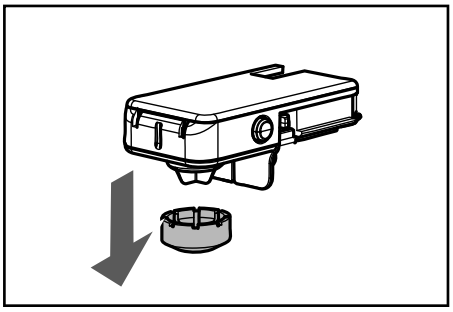

11 Turn and lift the Cappuccinatore cover and remove it from the Cappuccinatore body.

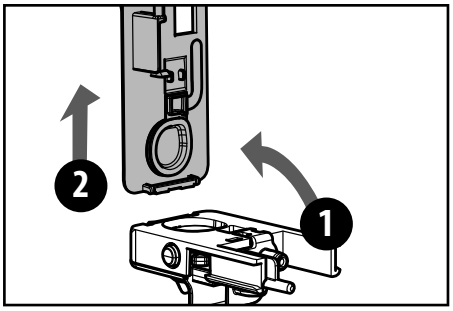

12 Remove the valve from the Cappuccinatore.

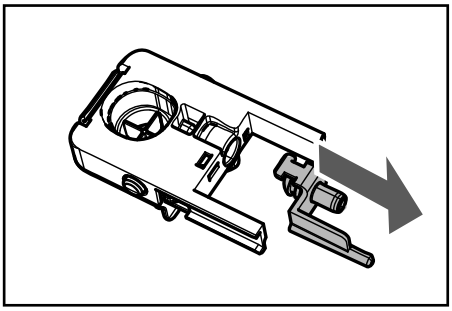

13 Remove the suction tube joint from the Cappuccinatore.

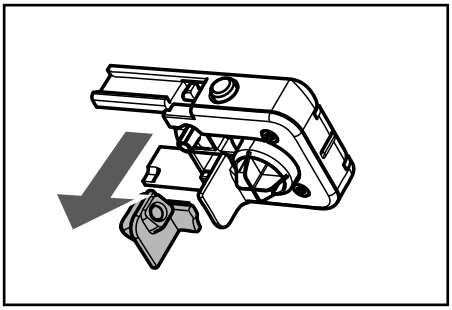

14 Wash the parts under running water.
Make sure any possible milk deposits/residues are removed.

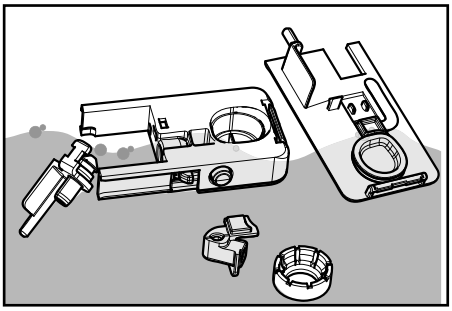

15 After washing, reassemble the parts following the same procedure used for disassembly, but in reverse order.

6 MACHINE WARNINGS

This chapter describes all the warning messages that the machine provides to the user, and the actions that can and/or must be performed by the user.

Help Message Displayed	How to Reset the Message
CLOSE SIDE DOOR	To restore the machine operation, close the service door.
INSERT DRIP TRAY	Place the drip tray in its seat (Ref.13 - Page 2).
INSERT COFFEE GROUNDS DRAWER	Place the coffee grounds drawer in its seat (Ref.14 - Page 2).
INSERT GROUP COMPARTMENT DRAWER	Place the group housing drawer in its seat (Ref.26 - Page 2).
CLOSE HOPPER DOOR	Close or correctly place the coffee bean hopper inner lid to be able to prepare any product.
REFILL WATER TANK	Remove the tank and fill it with fresh drinking water.
INSERT BREW GROUP	Insert the Brew Group into its seat.
INSERT CAPPUCCINATORE	The selected operation requires milk dispensing. Insert the Cappuccinatore in the machine as specified in the manual.
INSERT VALVE INTO CAPPUCCINATORE	The selected operation requires milk dispensing. Insert the previously removed valve in the Cappuccinatore as described in the manual (see step 12 - section 5.4).

Help Message Displayed	How to Reset the Message
ADD COFFEE	Fill the coffee bean hopper with coffee beans.
auLika CALC CLEAN	The machine requests a descaling cycle. When this message is displayed, it is still possible to use the machine, but its correct operation might be affected. Damages caused by failure to descale the machine are not covered by warranty.
auLika	The machine requests the "Intenza" water filter to be replaced with a new one. Contact the Service Provider.
auLika	The machine reminds that after a few cycles it will be necessary to empty the coffee grounds drawer (see section 3.7). This message does not prevent the machine from brewing some more products.
EMPTY COFFEE GROUNDS DRAWER	Remove the coffee grounds drawer and empty the coffee grounds into a suitable container. **Note: The coffee grounds drawer must be emptied only when required by the machine and with the machine turned on and/or in stand-by mode. If the drawer is emptied with the machine turned off, the machine will not record the emptying operation.**
auLika	Blinking red light. Machine in Stand-by. The Stand-by settings can be changed (contact the Service Provider). Press the "⏻" button (25).
RESTART TO SOLVE	An event has occurred which needs the machine to be restarted. Take note of the code (E xx) shown at the bottom. Turn off the machine, wait for 30 seconds and then turn it on again. If the problem persists, contact the service centre.
DESCALING DESCALING NEEDED. DESCALE? ESC NO OK YES	If this page is displayed after starting the machine, this means that the descaling cycle is needed. Contact the Service Provider. **We remind you that damages caused by failure to descale the machine are not covered by warranty.**

7 HANDLING AND STORAGE

All the operations described in chapter 7 must be performed exclusively by the service provider or a specialised technician, who shall organise all operating sequences and employ suitable means to ensure strict compliance with the safety regulations in force.

7.1 Handling

During handling and transportation, the machine must be kept in vertical position, according to the instructions printed on the packaging. Care should be taken during lifting and positioning. Do not shake the machine.

Make sure that no one is standing in the area during lifting and handling of the load. In difficult conditions assign suitable personnel to monitor all movements.

7.2 Storage

The machine should be stored in accordance with the following conditions:

- Minimum temperature: above 4°C;
- Maximum temperature: below 40°C;
- Maximum humidity: below 95%.

The machine is packed in cardboard and expanded polystyrene packaging.

Warning! Due to the total weight of the packaged product, machines may not be stacked higher than three units. The machine should be stored in its original packaging, in a place FREE from humidity and/or dust.

8 INSTALLATION

All the operations described in chapter 8 must be performed exclusively by the service provider or a specialised technician, who shall organise all operating sequences and employ suitable means to ensure strict compliance with the safety regulations in force.

8.1 Safety Regulations

- Read the entire instruction manual carefully.
- The machine must be connected to the mains according to the safety regulations in force in the country where the machine is used.
- Connection to the drinking water network (for water network machines) should be made in compliance with the safety regulations in force in the country where the machine is to be used.
- The socket to which the machine is connected must be:
  - Compatible with the type of plug installed on the machine;
  - Suitably sized to comply with the data on the plate attached to the bottom of the appliance;
  - Connected to an efficient earthing system.
- The power cord must not:
  - Come into contact with any type of liquid: danger of electric shocks and/or fire;
  - Be crushed and/or come into contact with sharp surfaces;
  - Be used to move the machine;
  - Be used if damaged;
  - Be handled with damp or wet hands;
  - Be wound in a coil when the machine is in use;
  - Be tampered with.
- If the power cord is damaged, it must be replaced by the manufacturer or his service centre, or in any case by a person with a similar qualification.
- It is forbidden to:
  - Install the machine other than as described in Chap. 8 or outdoors.
  - Install the machine in a location where water jets may be used.
  - Disable the safety measures installed by the manufacturer.
  - Use the machine outdoors, next to flammable and/or explosive materials.
  - Leave plastic bags, polystyrene, nails, etc, within the reach of children, as they are potential hazards.
  - Allow children to play near the machine.
  - Use spare parts other than those recommended by the manufacturer.
  - Make any technical modifications to the machine.
  - Immerse the machine in any kind of liquid.
  - Wash the machine using a jet of water.
  - Use the machine in any manner other than as described in this manual.
  - Install the machine on top of other appliances.
  - Use the machine in explosive or harsh environments, or with high concentrations of dust or oily substances suspended in the air.

- Use the machine in an environment in which a risk of fire exists.
- Use the machine to dispense products other than those it is designed for.

- Before cleaning the machine, ensure the plug is disconnected from the power socket; do not wash it with fuel and/or solvents of any kind.
- Do not place the machine near heating equipment (such as stoves or radiators).
- In case of fire, use carbon dioxide (CO_2) extinguishers. Do not use water or dry powder extinguishers.

8.2 Stop Functions

The machine can be stopped by means of the power button.

8.3 List of Accessories Supplied

Manual: Instructions on how to use the machine.

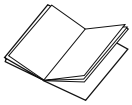

Water hardness test: Quick test to determine the actual hardness of the water used to prepare beverages; this test is of fundamental importance to set the water hardness in the machine.

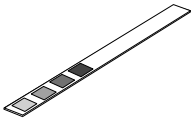

Access key to the water tank and service compartment door: This prevents access to the water tank and brew group by unauthorised personnel.

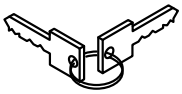

Cleaning brush to remove the coffee grounds from the service compartment.

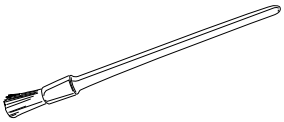

Power cord to connect the machine to the mains.

Lubricating oil to lubricate the Brew Group at periodic intervals (see section 10.6).

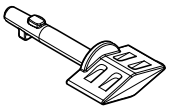

Door safety cut-out key: it allows the door safety (6-Page 2) to be cut out in order to perform the coffee grinder adjustment. (see section 8.16).

With this key the machine can be used also with the door open, so your hands may come into contact with the brew group while in motion: Danger of crushing. This key must be used only by specialist technical personnel or by the service provider. Using it for any other purpose is forbidden.

Descaling solution to remove limescale building up in the water circuit due to normal use.

"Intenza+" water filter to remove any unpleasant flavours in water and reduce water hardness. This will improve machine use.

8.4 Assembly-Siting

The machine must not be installed outdoors or in environments in which jets of water or steam are used.

The presence of magnetic fields or proximity to electrical machines which generate disturbances could cause the electronic controls of the machine to malfunction. At temperatures close to 0°C, internal parts containing water are at risk of freezing. Do not use the machine under these conditions.

To ensure correct and efficient performance of the appliance, comply with the following recommendations:

- Room temperature: 10°C ÷ 40°C;
- Maximum humidity: 90%;
- The site should be suitably prepared for the installation of the machine;
- The surface on which the machine is installed should be level, solid and stable, with a gradient of max 2°;
- The location should be adequately lit, ventilated and clean, and the power socket should be easily accessible.

Access to the machine and the plug should be kept clear at all times, in order to allow users to easily reach them and to leave the area immediately if required.

The following illustration shows the required access distances:

- To the keypad on the front of the appliance
- To the service units in the event of malfunction.

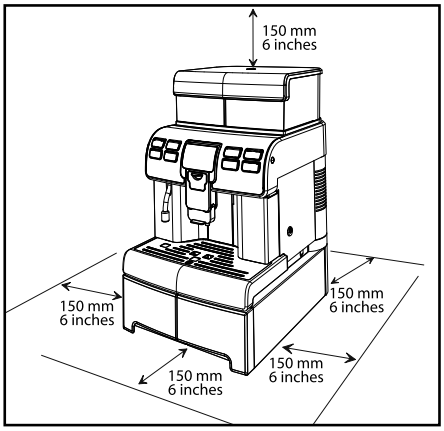

The machine consists of 2 parts packed in 2 different packages and which should be assembled as described in section 8.6.

After placing the packing container near the installation site, proceed as follows:

- Ensure that the container has not been tampered with during transport and that the original packaging is intact and closed;
- Open the container;
- Check the condition and model of the machine;
- Check the contents of the accessories bag enclosed with the machine (see "8.3 List of Accessories Supplied");
- Remove the machine from its original packaging;
- Remove any remaining packaging from the machine;
- Lift the machine and place it in the designated area.

8.5 Disposal of Packaging

After opening the package, it is recommended that the packaging materials are separated according to type and disposed of in accordance with the regulations in force in the country of use.

We recommend keeping the container for future transfers or transportation.

8.6 Installing the Container Base

The containers have to be installed at the base of the machine before starting to use the appliance.

1 Remove the drip tray and the group compartment drawer to be able to install the containers.

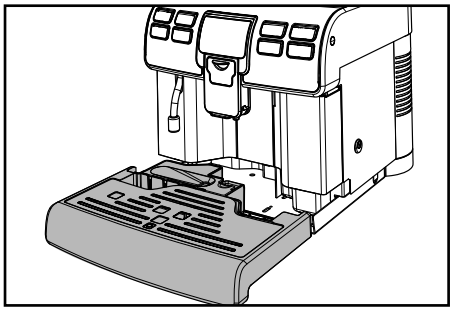

2 Open the service door with the supplied key.

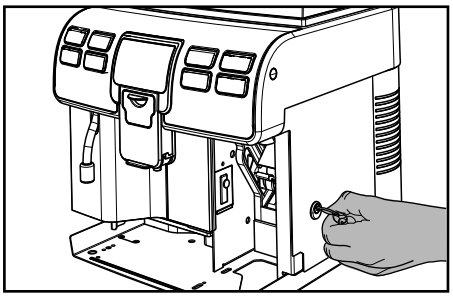

3 Remove the Brew Group: Pull it by the handle and press the «PRESS» button.

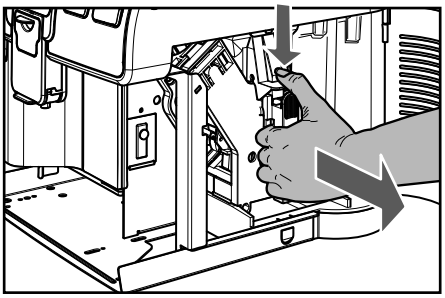

4 Lift the rear side of the inner drawer and unlock the drawer.

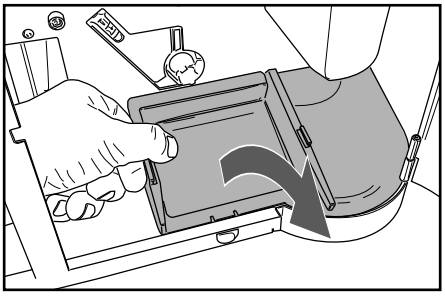

5 Fix the base with the drawers by using the supplied screws.

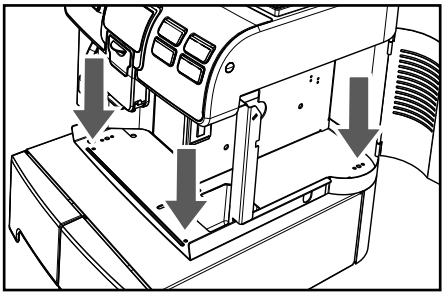

Remember that the components must be correctly aligned: Check them.

After installing the containers, refit the components and close the door. Install the group compartment drawer and the drip tray.

8.7 Opening the Upper Lid

The upper lid should be removed in order to fill the containers. The lid is a safety device which allows access only to authorised personnel.

1 Unlock the lid with the special key supplied and remove it.

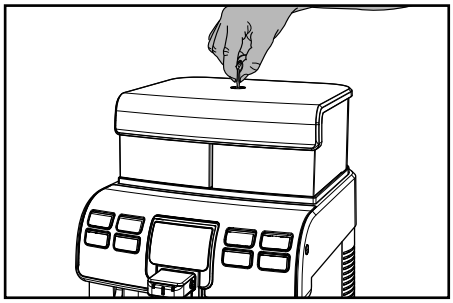

2 After unlocking the lid, lift and remove it.

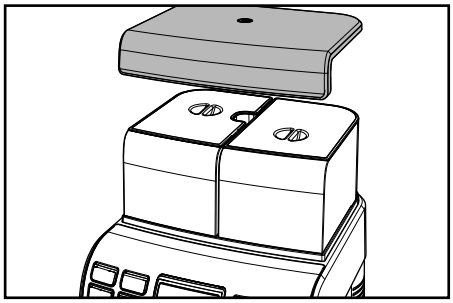

Now the water tank and the coffee bean hopper can be filled.

8.8 Filling the Water Tank

Before switching on the machine, the water tank should be filled with fresh drinking water.

Warning! Before using the machine for the first time, wash the water tank carefully.
The tank should be filled only with fresh drinking water, as hot water, carbonated water or other liquids will damage the machine.

1 Remove the safety lid as described in section 8.7.

2 Remove the lid.

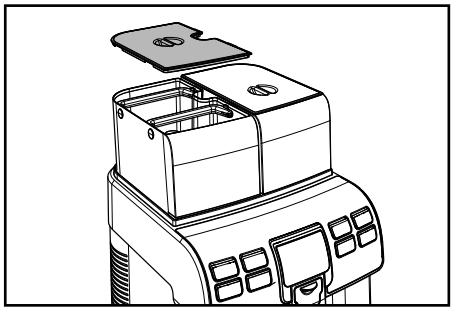

3 Remove the tank - lift it using the inside handles.

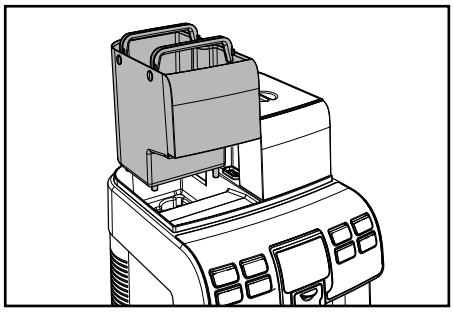

4 Rinse and fill it with fresh water, making sure that the (MAX) level indicated in the tank is not exceeded.

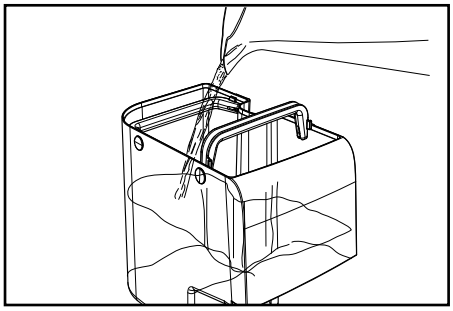

5 Insert the water tank back into its seat and refit the lid.

8.9 Filling the Coffee Bean Hopper

Before switching on the machine, check that the hopper contains a sufficient quantity of coffee beans.

Warning! Only coffee beans must be put into the coffee bean hopper. Ground coffee, instant coffee or any other object may damage the machine.

1 Remove the coffee bean hopper lid.

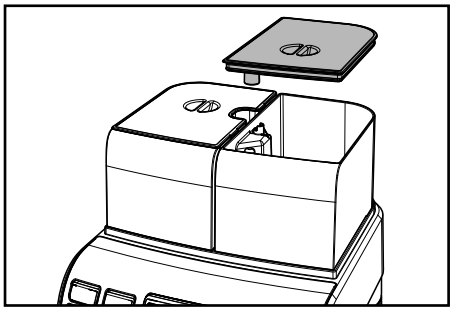

Note: The hopper may feature a different safety system according to the regulations applicable in the country of use of the machine.

2 Slowly pour the coffee beans into the hopper.

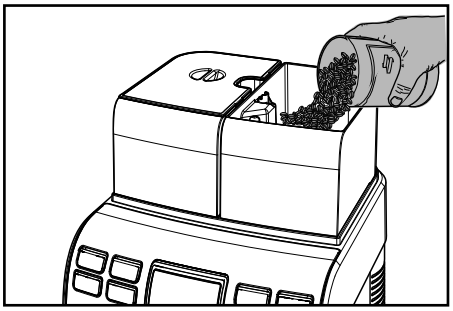

If the water tank is not inserted, check that no coffee beans fall into the tank compartment. If this happens, remove them to avoid any malfunctions.

3 Refit the coffee bean hopper lid.

8.10 Closing the Upper Lid

After refilling and during normal operation the upper safety lid must always be fitted and locked using the special key, in order to prevent access to unauthorised people.

1 In order to lock the upper lid (1), place and close it using the special supplied key.

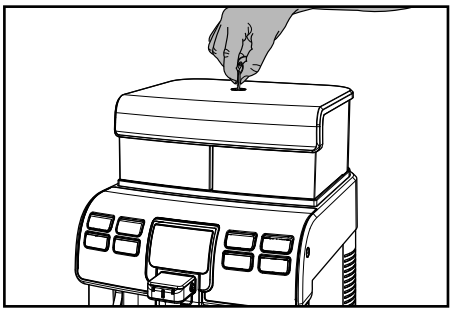

8.11 Electrical Connection

This operation must only be performed by specialist technical personnel or by the service provider.

The machine is designed to work with single-phase voltage matching the rating indicated on the identification plate (section 1.4 "Machine Identification").
Before plugging in the machine, make sure that the power button is switched to "0".
The Service Provider makes and is responsible for the electrical connection of the machine.
The machine should be connected to the mains using the plug installed on the power cord, in accordance with:

- The Laws and Regulations in force at the place and time of installation;
- The information shown on the technical specifications plate on the side of the machine.

Warning: The electric socket which the appliance is connected to must be easily accessible by the user, in order to allow it to be easily disconnected from the mains when necessary.

It is forbidden to:

- **Use extensions of any kind.**
- **Replace the original plug.**
- **Use adapters.**

8.12 Setting the Language (Upon First Use)

At first start up, the machine requires you to select and store the desired language for the display of messages. This allows you to adjust the parameters of the beverages to the typical parameters of the country where the machine is used.

LANGUAGE
ITALIANO
ENGLISH
DEUTSCH
FRANÇAIS

1 Select the language by pressing the "CLEAN" (24) or "" (20) button.

2 Press the "" button (18) to store the language.

3 The machine starts the system warm-up.

Note: Upon first use, once the warm-up is complete the machine primes the circuit and performs a rinse cycle of the internal circuits. During this process, a small amount of water is dispensed. Wait for this cycle to be completed.

8.13 First Use - Use After a Long Period of Inactivity

For a perfect Espresso: Rinse the coffee circuit if using the machine for the first time or after a long period of inactivity.

These simple operations allow you to always brew excellent coffee. They have to be performed:

A) At first start-up;
B) When the machine remains inactive for a long time (more than 2 weeks).

1 Empty the water tank, wash and rinse it and fill it with fresh water (see section 8.8).

2 Place a large container under the dispensing spout **(Fig.05, page 3)**.

3 Press the "☕"button to start the brewing procedure.

4 The machine will brew coffee through the dispensing spout (10, page 2). Wait until the procedure is complete and empty the container.

5 Repeat the operations from step 2 to step 4 for 3 times, then continue with step 6.

6 Place a container under the hot water wand **(Fig.07, page 3)**.

7 Press the "♨" button (22) to start dispensing HOT WATER.

8 When the hot water dispensing procedure is complete, empty the container.

The machine is now ready for use.

8.14 Measuring and Adjusting Water Hardness

Measuring water hardness is very important in order to correctly manage the "INTENZA+" filter and the frequency with which the machine must be descaled.

1 Immerse the water hardness test strip - provided with the machine - in water for 1 second.

Note: The test strip is only valid for one measurement.

2 Check how many squares change colour and refer to the table.

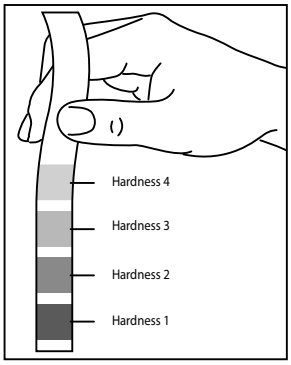

3 The numbers correspond to the settings indicated in the following machine adjustments.

HARDNESS 4 (hard)
HARDNESS 3 (medium)
HARDNESS 2 (soft)
HARDNESS 1 (very soft)

4 Enter the programming mode as described in section 9.1.

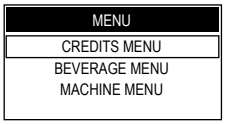

5 To select the "MACHINE MENU" option, press the "CLEAN" button (24).

MENU
CREDITS MENU
BEVERAGE MENU
MACHINE MENU

6 Press the "☕" button (18) for access.

MACHINE MENU
GENERAL MENU
DISPLAY MENU
WATER MENU
MAINTENANCE

7 Press the "CLEAN" button (24) until the "WATER MENU" option can be selected.

MACHINE MENU
GENERAL MENU
DISPLAY MENU
WATER MENU
MAINTENANCE

8 Press the "☕" button (18) for access.

WATER MENU
HARDNESS
WATER NET
ENABLE FILTER
ACTIVATE FILTER

9 Press the "☕" button (18) to enter the "HARDNESS" menu.

Note: The machine is supplied with standard adjustments, suitable for most of the uses.

HARDNESS
1
2
3
4

10 Press:
The "CLEAN" button (24) to increase the value
or
the "☕" button (20) to decrease the value.

11 Press the "☕" button (18) to confirm the selected change.

After adjusting water hardness install the filter (Intenza+), as described in the following section. Then, exit the programming page as described in section 9.2.

8.15 "INTENZA+" Water Filter

Water is a key element for a good espresso coffee, and should therefore always be filtered in a professional manner. That is why all Saeco machines are equipped with the INTENZA+ filter. This filter is easy to use and its sophisticated technology is effective in preventing limescale build-up. This way, water will always be perfect and will give a much more intense aroma to your espresso coffee.

The "INTENZA+" water filter can be installed only if the machine is NOT connected to the water network.

The descaling filter should be replaced whenever indicated by the machine. Before descaling, remove the anti-scale filter from the water tank.

Measuring water hardness is very important in order to correctly manage the "INTENZA+" water filter and the frequency with which the machine must be descaled.

1 Remove the "INTENZA+" water filter from its package. The filter should be set according to the measurements performed to set water hardness.

Use the water hardness test strip provided with the machine. Set the "Intenza Aroma System" as specified on the filter package (see section 8.14).

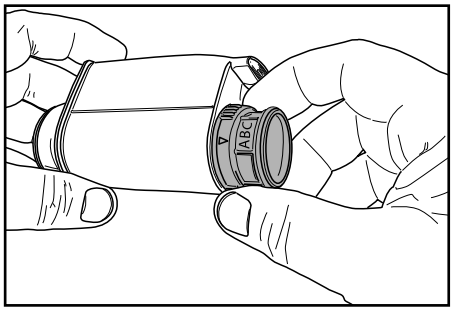

A = Soft water
B = Hard water (standard)
C = Very hard water

2 Immerse the "INTENZA+" water filter vertically in cold water (with its opening positioned upwards) and delicately press its sides so as to let the air bubbles out.

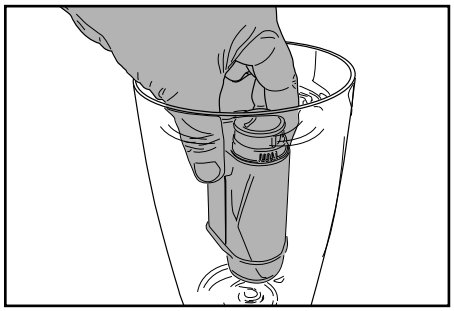

3 Enter the programming mode as described in section 9.1.

MENU
CREDITS MENU
BEVERAGE MENU
MACHINE MENU

4 To select the "MACHINE MENU" option, press the "CLEAN" button (24).

MENU
CREDITS MENU
BEVERAGE MENU
MACHINE MENU

5 Press the "☕" button (18) for access.

MACHINE MENU
GENERAL MENU
DISPLAY MENU
WATER MENU
MAINTENANCE

6 Press the "CLEAN" button (24) until the "WATER MENU" option can be selected.

MACHINE MENU
GENERAL MENU
DISPLAY MENU
WATER MENU
MAINTENANCE

7 Press the "☕" button (18) for access.

8 Press the "CLEAN" button (24) until the "ACTIVATE FILTER" option can be selected.

WATER MENU
HARDNESS
WATER NET
ENABLE FILTER
ACTIVATE FILTER

9 Press the "☕" button (18) for access.

ACTIVATE FILTER	
ACTIVATE FILTER?	
ESC ➔ NO	OK ➔ YES

Note: To exit the procedure, press the "★" button (23).

10 Press the "☕" button (18) to continue.

ACTIVATE FILTER
INSERT FILTER.
FILL THE TANK
OK

11 Remove the tank from the machine and empty it. Remove the small white filter from the tank and store it in a dry place sheltered from dust.

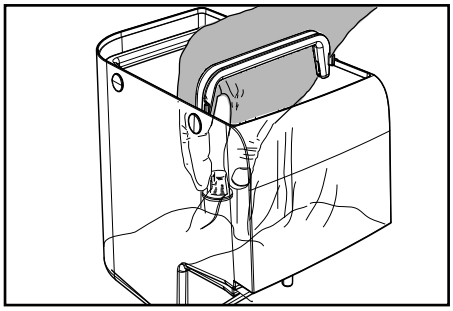

12 Put the filter into the empty tank. Press it until its limit stop.

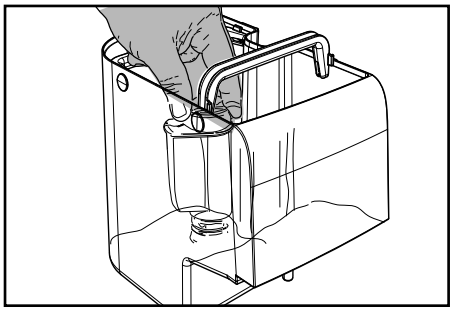

13 Fill the tank with fresh drinking water and reinsert it into the machine.

14 Press the "☕" button (18) to confirm the introduction of the new filter.

ACTIVATE FILTER
EMPTY DRIP TRAY
OK

15 Remove and empty the drip tray (13-page 2). When the drip tray is empty, refit it in the machine and press the "☕" button (18) to confirm that the procedure is completed.

ACTIVATE FILTER
PLACE A CONTAINER
UNDER THE
WATER SPOUT
OK

16 Place a large container under the hot water wand **(Fig.07, page 3)**.

17 Press the "☕" button (18) to confirm.

Wait until the machine stops dispensing the necessary water to activate the filter.

ACTIVATE FILTER

At the end of the cycle, remove the container that you had previously placed under the hot water wand.

Note: At the end of the procedure, the display automatically returns to the product brewing page. If the water filter is not available, insert the small white filter previously removed (see step 11) into the tank.

8.16 Adjusting the Coffee Grinder

Warning! Do not pour ground and/or instant coffee into the coffee bean hopper. Do not put any material other than coffee beans into the hopper. The coffee grinder contains moving parts that may be dangerous. Therefore, do not insert fingers and/or other objects. Turn off the machine by pressing the ON/OFF button and remove the plug from the socket before carrying out any type of operation inside the coffee bean hopper.

The machine allows the coffee grinder to be slightly adjusted in order to adapt it to the kind of coffee used. For any adjustments, use the lever placed on the inner side of the machine service compartment.

1 With the machine turned on, open the service compartment door by using the appropriate key.

2 Disable the safety microswitch by inserting the key as shown in the figure.

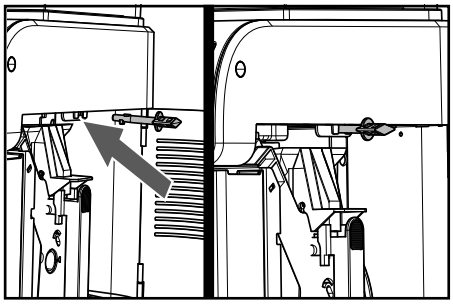

Warning! Disabling the safety microswitch entails a danger for the operator to come into contact with the moving parts of the appliance. Enable the safety device again right after completing the adjustment.

3 Turn the lever by only one notch at a time during the grinding phase. Brew 2-3 cups of coffee to verify changes in grind.

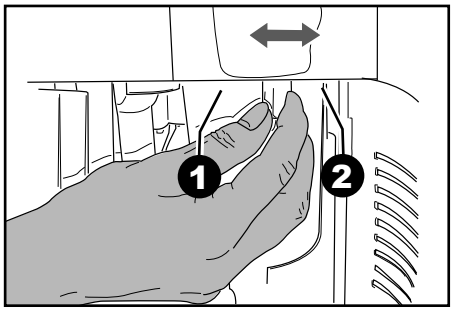

The reference marks indicate the grind setting. You can set different degrees of grind with the following references:
1 - Fine Grind
2 - Coarse Grind

8.17 Adjusting the "Aroma" - Amount of Ground Coffee

The machine allows you to program the amount of coffee to be ground for preparing each cup of coffee.

Warning! The Aroma adjustment lever must only be turned when the coffee grinder is stopped. Adjustment must be performed before brewing coffee.

For any adjustments, use the lever placed on the inner side of the machine service compartment.

1 Open the service compartment door with the appropriate key.

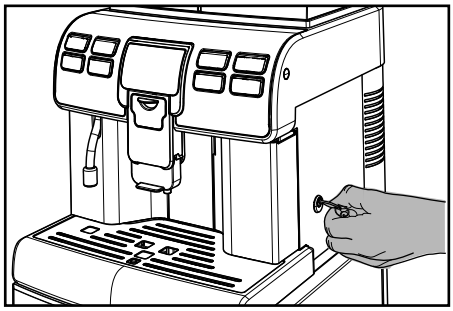

The reference marks indicate the amount of ground coffee which has been set. You can set different amounts with the following references:

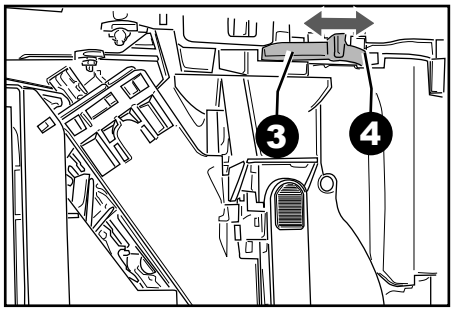

3 - Minimum coffee amount (about 7 grams)
4 - Maximum coffee amount (about 11 grams)

8.18 Adjusting Brewed Products

The machine allows you to adjust the product length according to your needs and to the cup features.

The product length in the cup can be set with two methods:

1 Numeric method
2 Visual method

Numeric Method

To set the length with this method, enter the **"BEVERAGE MENU"** and program each available beverage from the keypad. This system requires the user to carry out a subsequent check of the actual quantity of product brewed in the cup.

The procedure for programming a cappuccino, with detailed operational sequences, is explained as an example.

1 Enter the programming mode as described in section 9.1.

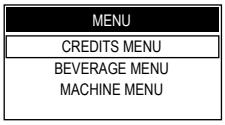

2 To select the "BEVERAGE MENU" option, press the "CLEAN" button (24).

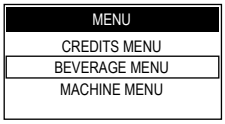

3 Press the "" button (18) for access.

4 To select the "CAPPUCCINO" option, press the "CLEAN" button (24).

BEVERAGE MENU
ESPRESSO
COFFEE
CAPPUCCINO
LATTE MACCHIATO

5 Press the "" button (18) for access.

CAPPUCCINO
PREBREWING
COFFEE TEMPERATURE
COFFEE LENGTH
MILK QUANTITY

6 Press the "" button (18) to access the "PREBREWING" menu.

PREBREWING
OFF
LOW
HIGH

7 Press the "CLEAN" (24) or "" (20) button to select the desired value. Then press the "" button (18) to confirm and exit.

8 Press the "CLEAN" button (24) to select the "COFFEE TEMPERATURE" menu.

CAPPUCCINO
PREBREWING
COFFEE TEMPERATURE
COFFEE LENGTH
MILK QUANTITY

9 Press the "" button (18) for access.

COFFEE TEMPERATURE
LOW
NORMAL
HIGH

10 Press the "CLEAN" (24) or "" (20) button to select the desired value. Then press the "" button (18) to confirm and exit.

11 Press the "CLEAN" button (24) to select the "COFFEE LENGTH" menu.

CAPPUCCINO
PREBREWING
COFFEE TEMPERATURE
COFFEE LENGTH
MILK QUANTITY

12 Press the "" button (18) for access.

COFFEE LENGTH
185

13 Press the (24) "CLEAN" or (20) "" button to select the desired value and then let the bar advance; the number on the side identifies the bar value **(in pulses)**.

Then press the "" button (18) to confirm and exit.

14 Press the "CLEAN" button (24) to select the "MILK QUANTITY" menu.

CAPPUCCINO
COFFEE TEMPERATURE
COFFEE LENGTH
MILK QUANTITY
DEFAULT

15 Press the "" button (18) for access.

MILK QUANTITY
18

16 Press the (24) "CLEAN" or (20) "" button to select the desired value and then let the bar advance; the number on the side identifies the bar value **(in seconds)**.

Then press the "" button (18) to confirm and exit.

When this phase is completed, the beverage is programmed. We recommend performing a visual check of the result. To restore the factory settings of a single beverage, proceed as follows.

Note: The factory settings can be restored for each single beverage and the restored settings will be applied only to that specific beverage. To restore the other beverages' settings, enter the menu and restore the settings.

17 Press the "CLEAN" button (24) to select the "DEFAULT" menu.

18 Press the "" button (18) for access.

Note: The restoring operation deletes the stored data definitely. To quit the procedure press the "" (23) button.

19 Press the "" button (18) to confirm.

The beverage factory settings have been restored. Press the "" button (23) once or more times to exit.

Visual Method

This method allows the product length to be set by the service provider via keypad in visual mode, i.e. the product quantity is adjusted while being brewed. This function is disabled by default, but it can be activated in order top perform a quicker setting procedure.

1 Enter the programming mode as described in section 9.1.

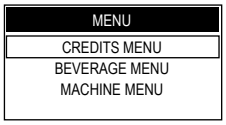

2 To select the "MACHINE MENU" option, press the "CLEAN" button (24).

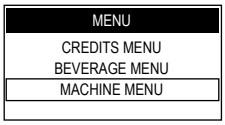

3 Press the "" button (18) for access.

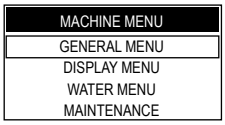

4 Press the "" button (18) to enter the "GENERAL MENU".

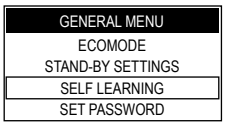

5 To select the "SELF LEARNING" option, press the "CLEAN" button (24). Press the "" button (18) for access.

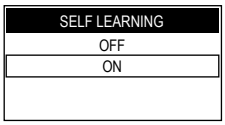

6 To select the "ON" option, press the "CLEAN" button (24). Press the "" button (18) to confirm.

Press the "" button (23) to exit the programming mode.

When the function is active, press the button of the beverage that you wish to set and stop the brewing process when desired, as shown on the display. The procedure for programming a cappuccino is explained as an example. Before carrying out the programming procedure, prepare the machine as described in section 3.8.

7 Place a cup under the dispensing spout (Fig.12, page 3).

8 Press and hold the "" button (20) until the "MEMO" message is displayed, then remove your finger. The machine is now programming.

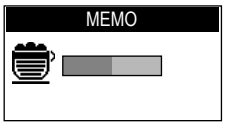

9 The machine starts the milk dispensing phase. The **"STOP MILK"** message is displayed.

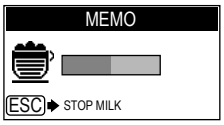

At this stage, press the "★" button (23) when the desired amount of milk in the cup is reached.

10 Immediately after that, the machine starts the coffee brewing phase. The **"STOP COFFEE"** message is displayed.

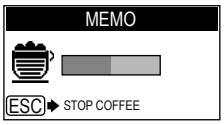

At this stage, press the "★" button (23) when the desired amount of coffee in the cup is reached.
Now the "☕" button (20) has been programmed. Whenever the button is pressed and released, the machine will brew the same amount that has just been set.

Note: The length of all the products, except "AMERICAN COFFEE" and "STEAM", can be programmed with this procedure.

When the programming procedure is completed, enter the programming mode and reset the **"SELF LEARNING"** parameter to **"OFF"**, in order to prevent other users from accidentally changing the quantities.

9 MACHINE PROGRAMMING

All the operations described in chapter 9 must be performed exclusively by the service provider or a specialised technician, who shall organise all operating sequences and employ suitable means to ensure strict compliance with the safety regulations in force.

The specialist technician or the service provider can change some of the machine operating parameters to suit the needs of the users.

9.1 Accessing the Programming Mode

Proceed as follows to access the programming page.
1 Turn off the machine using the power button.

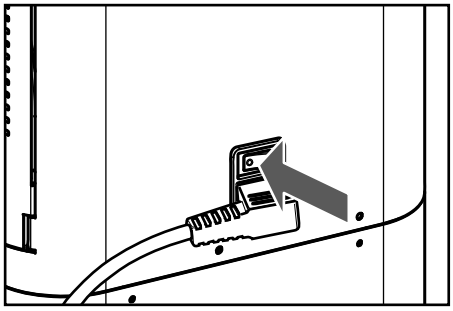

2 Turn on the machine using the power button and...

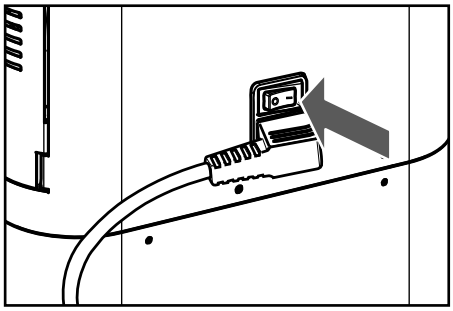

while the machine checks the functions, press the buttons in the following sequence.

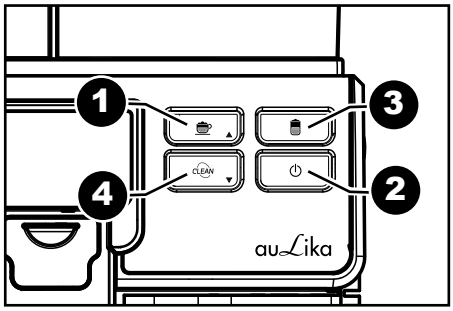

If the sequence was correct, the programming menu opens.

MENU
CREDITS MENU
BEVERAGE MENU
MACHINE MENU

Sections 9.3, 9.4 and 9.5 list all the functions available in these menus.

Note: The above mentioned procedure can be used to access the programming menu also when the machine is cold and has not reached the operating temperature. To execute certain programs (e.g. DESCALING) the machine will manage the procedure automatically and heat up according to the manufacturer's settings.

Note: After 3 minutes of inactivity the machine exits the programming mode and returns to the standard operating mode.

The menus should be PASSWORD-protected.

If the PASSWORD is set on the default value (0000), it will not be requested. It should be changed upon 1st use to prevent unauthorised access. After this change, it should be entered again at each access, every time the display shows:

INSERT PASSWORD
0 0 0 0

Refer to section 9.6 on how to set the PASSWORD.

9.2 Programming Controls

When the machine menus are accessed, the buttons on the keypad take on new functions.

"" "page up/change" button (20)
This button allows you to:
1 Browse the pages within a menu;
2 Change the parameters when they are made editable using the "OK" button.

"CLEAN" "page down/change" button (24)
This button allows you to:
1 Browse the pages within a menu;
2 Change the parameters when they are made editable using the "OK" button.

"" (OK) button (18)
This button allows you to:
1 Select the function displayed;
2 Confirm the parameter/value when it is made editable.

"" "ESC" button (23)
This button allows you to exit without changing the parameter edited or selected.

Note: Press it repeatedly to exit the programming page.

9.3 Credits Menu

This menu allows you to manage the machine credits to avoid undesired product brewing. Credit management is not active for hot water, hot milk and steam dispensing.

- **CREDITS MENU** — To manage machine operation with credits.
  - **ADD CREDITS** — This function allows you to add credits to the machine.
  - **RESET CREDITS** — This function allows you to reset all the credits in the machine.
  - **SHOW CREDITS** — This function allows the credits to be displayed in the main page.
    Note: Regardless of the parameter chosen, the "CREDIT CONTROL" function must be enabled, otherwise the credits are not displayed by the machine.
    - **OFF** — To deactivate credits display.
      Note: The credit number is always displayed when the minimum level of 30 credits is reached, in order for the user to contact the service provider.
    - **ON** — To activate credits display.
  - **CREDIT CONTROL** — This function activates the credit control.
    - **OFF** — This function deactivates the credit control operation.
    - **ON** — This function activates the operation mode with credit control.

9.4 Beverage Menu

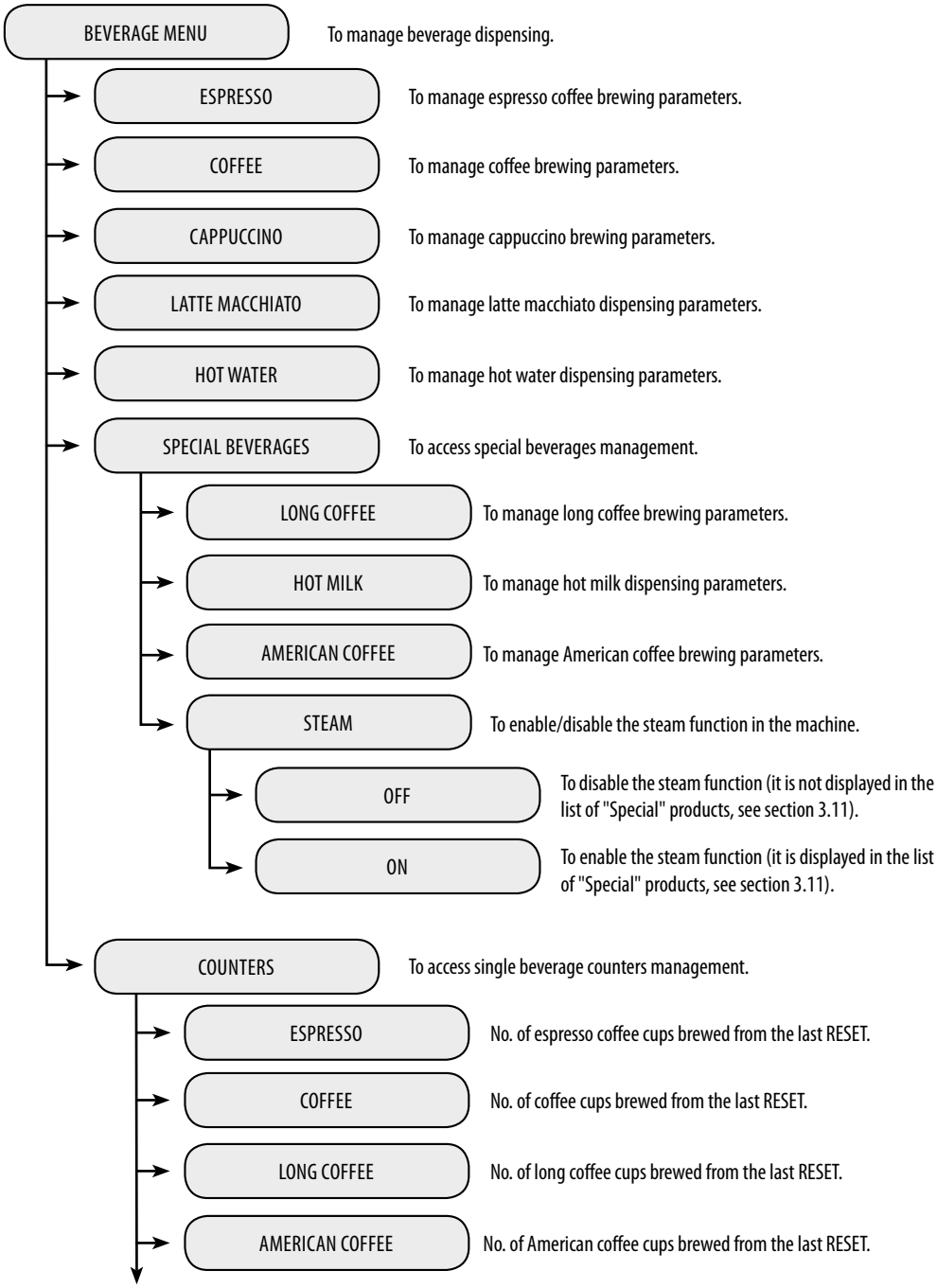

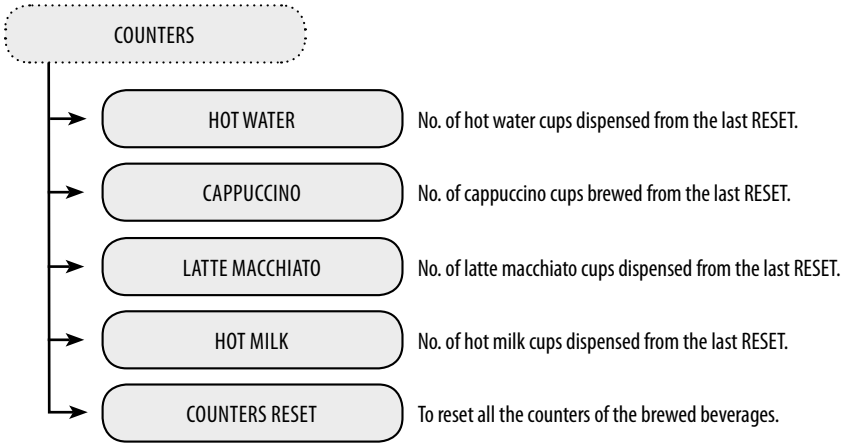

Beverage Parameters

Changeable parameters are described in this section.

Note: Not all parameters are always available for each programmable option.

PREBREWING

Prebrewing: Coffee is slightly dampened before brewing so as to bring out its full aroma and let it acquire an excellent taste.
OFF: prebrewing is not performed.
LOW: activated.
HIGH: longer in order to bring out the coffee taste.

COFFEE TEMPERATURE

This section allows you to program the temperature for the coffee brewing.
LOW: low temperature.
NORMAL: standard temperature.
HIGH: high temperature.

COFFEE LENGTH

This section allows you to program the amount of coffee to be brewed for each selected beverage. The bar allows you to set the exact amount of coffee to be brewed **(the value is measured in turbine pulses)**.

MILK QUANTITY

This section allows you to program the amount of milk for each selected beverage. The bar allows you to set the exact amount of milk to be dispensed **(the value is measured in seconds)**.
These settings are valid only for programming the dispensing of milk-based beverages.

WATER QUANTITY

This section allows you to set the amount of water to be dispensed when pressing the corresponding button. The bar allows you to set the exact amount of water to be dispensed **(the value is measured in turbine pulses)**.
These settings are valid only for programming hot water dispensing.

DEFAULT

The original standard values assigned by the manufacturer to each beverage can be reset also according to the selected language. After selecting this function, the customised beverage settings are deleted.

9.5 Machine Menu

This menu allows the general operation and maintenance parameters of the machine to be managed.

GENERAL MENU — To change the machine operating settings.

- **TONE** — This function activates/deactivates the acoustic alarms.
  - **OFF** — To deactivate the acoustic alarms.
  - **ON** — To activate the acoustic alarms
- **ECOMODE** — This function allows the machine boilers to be activated in order to save energy.
  The function is set by default to «ON».
  - **OFF** — This function activates all the boilers at every machine start-up, to be immediately able to prepare all kinds of beverages. The power consumption is higher this way, because the machine is always ready for use.
  - **ON** — This way, only the coffee boiler is activated at machine start-up. The machine saves energy but needs longer time to dispense milk-based beverages.
- **STAND-BY SETTINGS** — To set the time interval for the machine to go into stand-by mode after the last brewing.
  The default time value is «after 30 minutes».
  - **15 MINUTES**
  - **30 MINUTES**
  - **60 MINUTES**
  - **180 MINUTES**

  Once the set time has elapsed, the machine goes into stand-by mode.
  Press any button to turn the machine on again. After performing the function diagnostics and the warm-up phase, the machine is again ready for use.

GENERAL MENU

SELF LEARNING

To activate the beverage length self learning function.

- **OFF** — When set this way, self learning is not active.
- **ON** — When set this way, self learning is active. Hold a button pressed for 3 seconds to start the automatic cup length learning cycle.

SET PASSWORD

To set the access PASSWORD for machine programming.
Note: If the PASSWORD is set to (0000), it will not be requested upon access.
If the PASSWORD is forgotten, a restoring procedure must be started. Contact the Customer Service to do that.

DISPLAY MENU

With this menu, the menu language and the display brightness and contrast can be set.

LANGUAGE

This setting is of fundamental importance for correctly adjusting the parameters of the machine according to the country where the machine is used.

- **ENGLISH** — The currently selected language is displayed. The language can be changed with the special controls.

BRIGHTNESS

To set the correct display brightness according to room illumination.

CONTRAST

To set the correct display contrast according to the room illumination.

WATER MENU

This menu allows the correct water parameters for coffee brewing to be set.

HARDNESS

To change the machine water hardness setting.
With the "Hardness" function you can adjust your machine to the level of hardness of the water you use, so that the machine will request descaling at the right moment.
Measure water hardness as shown in section 8.14.

WATER NET

To activate the function that enables machine operation with the water network **(only for models designed accordingly).**

OFF

With this setting, the machine will work only if the tank is installed.

ON

With this setting, the machine will work using water from the water network.

Note: Use this function with utmost care, as a wrong setting may cause malfunctions.
The "ON" option must only be activated if the "WATER NET" kit is installed and connected properly. Using it under any other conditions will result in a machine failure.
When the "ON" option is selected the "ENABLE FILTER" and "ACTIVATE FILTER" functions will be hidden and will not be available for selection.

ENABLE FILTER

To activate/deactivate the warning indicating that the water filter should be replaced. By activating this function, the machine notifies the user when the water filter needs to be replaced.
OFF: Warning disabled.
ON: Warning enabled (this value is automatically set when the filter is activated).

These functions are visible only if the "WATER NET" function is set to OFF.

ACTIVATE FILTER

To activate the filter after its installation or replacement. Refer to section 8.15 to correctly install and/or replace the filter.

MAINTENANCE

This menu allows all the functions for correct machine maintenance to be set.

- **BREW GROUP CLEAN**
  This function allows you to perform the Brew Group wash cycle (see section 10.5).
- **DESCALING**
  This function activates and starts the descaling cycle (see section 10.7).
  - **START DESCALE**
    This function starts the descaling cycle as described in the relevant section.
  - **DESCALE WARNING**
    This function activates the display warning message indicating that the machine needs to be descaled.
    - **OFF**
      The warning message is not active.
    - **ON**
      The warning message is active. The message is displayed when the machine needs to be descaled.
- **CAPPUCCINATORE CLEANING**
  This function is used to manage the cleaning cycle for the Cappuccinatore used to prepare milk-based beverages (see section 10.3).
  Note: This cleaning cycle is fundamental for correct maintenance and operation of the Cappuccinatore.
  - **START CLEANING**
    This function starts the Cappuccinatore cleaning cycle as described in the relevant section.
  - **WARNING CLEANING**
    This function activates the display warning message indicating that the machine needs a Cappuccinatore cleaning cycle.
    - **OFF**
      The warning message is not active.
    - **ON**
      The warning message is active. The message is displayed when the machine needs a Cappuccinatore cleaning cycle.

FACTORY SETTINGS

This function allows all factory settings to be restored.
Note: This section allows the factory settings of the machine menu personal settings to be restored.

9.6 Setting the PASSWORD

The PASSWORD must be set by the service provider in order to prevent access by unauthorised personnel who could change the machine settings and cause malfunctions.

To set the PASSWORD, proceed as follows:

1 Enter the programming mode as described in section 9.1.

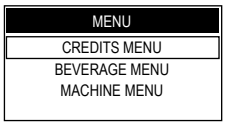

2 To select the "MACHINE MENU" option, press the "CLEAN" button (24).

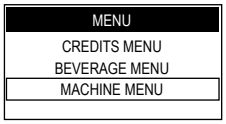

3 Press the "" button (18) for access.

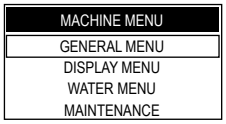

4 Press the "" button (18) to enter the "GENERAL MENU".

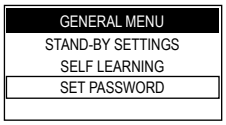

5 Press the "CLEAN" button (24) to select the "SET PASSWORD" option. Press the "" button (18) for access.

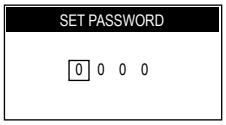

6 Now the PASSWORD can be set.

7 Press the "CLEAN" (24) or "" (20) button to set the desired number.

8 Press the "" button (18) to confirm the highlighted number and go to the following one.

9 Carry out the procedures described in steps (7) and (8) to set the chosen numbers.

Here an example that explains the procedure.

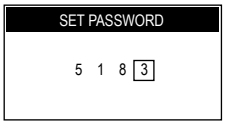

When the "" button (18) is pressed on the last number, the machine stores the code and displays the following page.

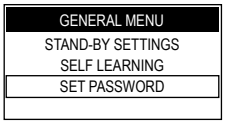

Press the "" button (23) repeatedly to exit the page. From now on the PASSWORD will always be required to access the menus.

10 CLEANING AND MAINTENANCE

All the operations described in chapter 10 must be performed exclusively by the service provider or a specialised technician, who shall organise all operating sequences and employ suitable means to ensure strict compliance with the safety regulations in force.

10.1 Cleaning Intervals

For improved efficiency, it is advisable to carry out the cleaning and maintenance operations indicated in the following table.

Operation to be carried out	Whenever indicated	Every week	Every month or 500 brewing procedures
Emptying and cleaning the coffee grounds drawer.	■		
Thorough cleaning of the Cappuccinatore			■
Water tank cleaning		■	
Brew group cleaning		■	
Brew group lubrication			■
Coffee bean hopper cleaning			■
Descaling	■		

10.2 Cleaning the Water Tank

The water tank should be cleaned every time it is filled.

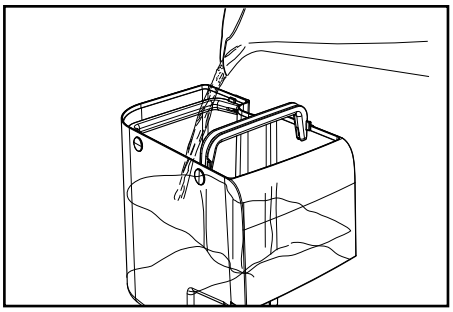

10.3 Thorough Cleaning of the Cappuccinatore

Clean all the Cappuccinatore parts thoroughly every month by using the Saeco detergent.

The Saeco detergent may be purchased at your local dealer or at authorised service centres.

The lack of cleaning before and after each use can affect the correct operation of the machine.

Danger of burns! Dispensing may be preceded by small jets of hot water.

1 Ensure that the Cappuccinatore is correctly placed **(Fig.09-10, page 3).**

2 Enter the programming mode as described in section 9.1.

3 Press the "CLEAN" button (24) and select the "MACHINE MENU" option; press the "☕" button (18) to enter the menu.

4 Press the "CLEAN" button (24) and select the "MAINTENANCE" option; press the "☕" button (18) to enter the menu.

MACHINE MENU
DISPLAY MENU
WATER MENU
MAINTENANCE
FACTORY SETTINGS

5 Press the "CLEAN" button (24) until the "CAPPUCCINATORE CLEANING" option can be selected.

MAINTENANCE
BREW GROUP CLEAN
DESCALING
CAPPUCCINATORE CLEANING

Press the "☕" button (18) to confirm.

CAPPUCCINATORE CLEANING
START CLEANING
WARNING CLEANING

Press the "☕" button (18) to confirm.

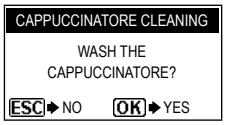

Note: If this option is confirmed, the cycle must be completed. Press the "★" button (23) to exit.

6 Press the "" button (18) to start the Cappuccinatore cleaning cycle.

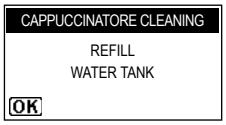

7 Fill the water tank and press the "" button (18) to confirm.

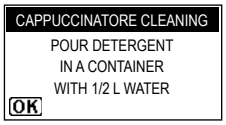

8 Pour a solution bag in a container with 1/2 (a half) litre of fresh drinking water.

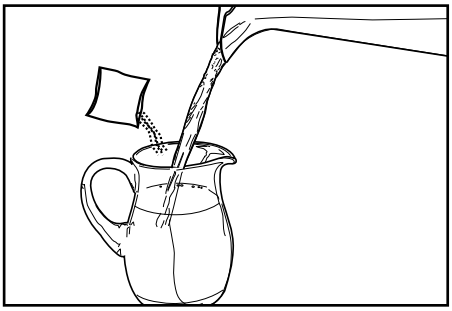

9 Wait for the bag content to dissolve completely and then press the "" button (18) to confirm.

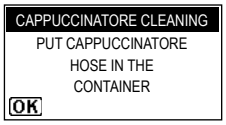

10 Insert the clean pipe directly into the container.

11 Press the "" button (18) to confirm.

Drinking the solution dispensed during this procedure is strictly prohibited. The solution must be disposed of.

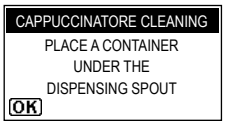

12 Place an empty container of at least 1 litre capacity under the dispensing spout and press the "" button (18) to confirm.

13 The machine performs a Cappuccinatore wash cycle.

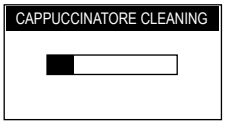

The bar shows the washing progress.

14 Wait for the cycle to end automatically. When the cycle is completed, the display shows:

15 Wash the water tank and fill it with fresh drinking water; press the "" button (18) to confirm.

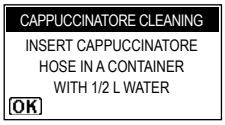

16 Wash thoroughly the container used for the solution and fill it with 1/2 (a half) litre of fresh drinking water which will be used for rinsing.

17 Empty the container placed under the dispensing spout.

18 Insert the suction hose in the container used.
Press the "" button (18) to confirm.

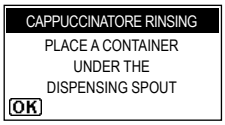

19 Place an empty container under the dispensing spout and press the "☕" button (18) to confirm.

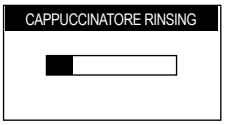

20 The machine performs a Cappuccinatore rinse cycle.
The bar shows the rinsing progress.

21 Wait until the cycle stops automatically. The machine will go back to the normal operating cycle.

22 Wash all the Cappuccinatore parts as described in section 5.4.

Important Note: It is advisable to remove the Cappuccinatore from the machine when not being used, in order to keep it clean.

10.4 Brew Group - Weekly Cleaning

The brew group should be cleaned every time the coffee bean hopper is filled, or at least once a week.

1 Turn off the machine by pressing the power button and remove the plug from the socket.

2 Remove the drip tray and the coffee grounds drawer.

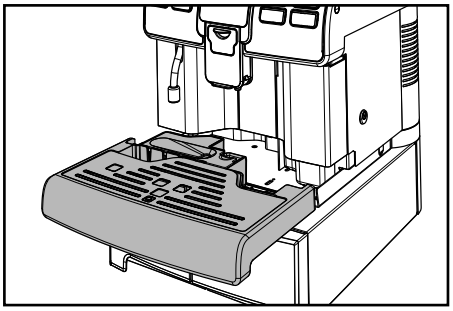

3 Open the service door with the supplied key.

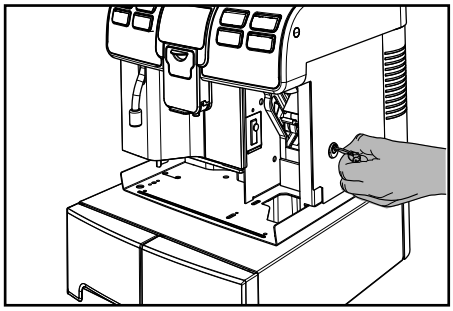

4 Remove the Brew Group: Pull it by the handle and press the «PRESS» button. The Brew Group must be washed only with lukewarm water, with no detergent.

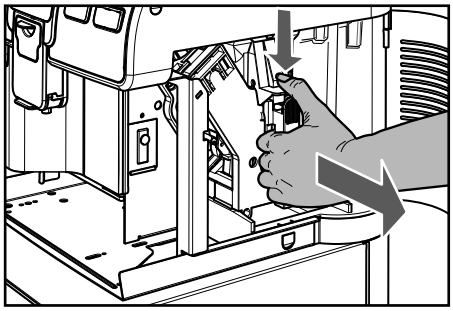

5 Wash the Brew Group with lukewarm water and carefully wash the upper filter. Before placing the Brew Group in its seat, ensure that there is no water left in the brewing chamber.

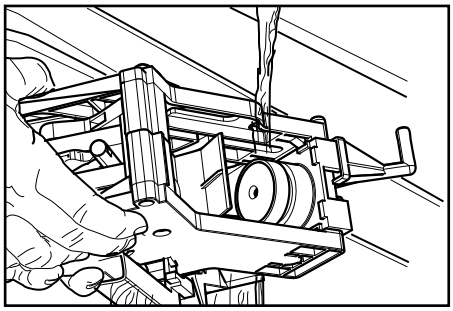

6 Lift the rear side of the inner drawer and unlock the drawer.

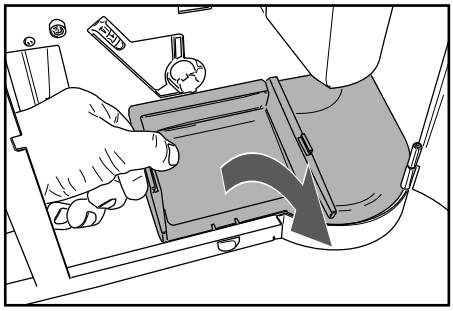

7 Remove the inner drawer, wash it and put it back into its seat.

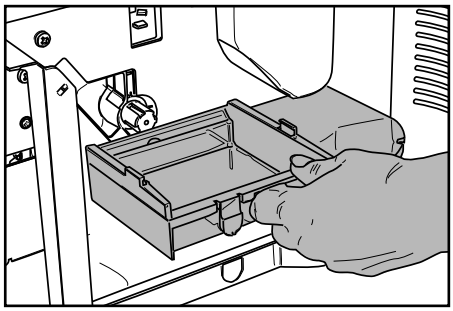

Note: When refitting the drawer, carry out the same operations performed for its removal, but in reverse order.

8 Ensure that the Brew Group is in the rest position; the two reference signs must match.

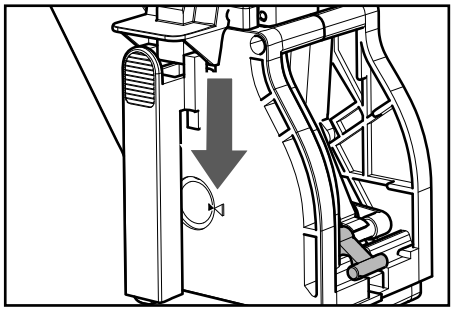

If they do no match, proceed as described in step (9).

9 Ensure that the lever is in contact with the brew group base.

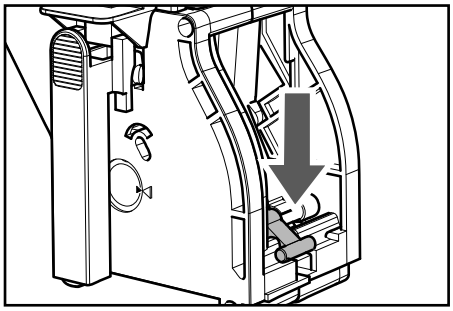

10 Ensure that the hook to lock the Brew Group is in the correct position; to do that, press the "PRESS" button firmly.

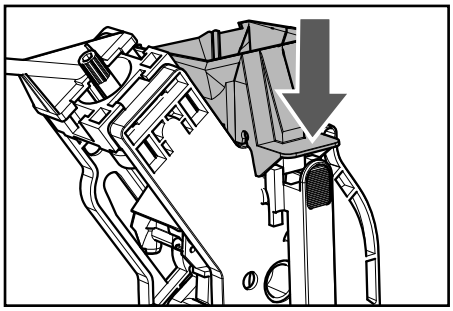

11 Insert the Brew Group back into its seat until it locks into place, WITHOUT pressing the "PRESS" button.

12 Insert the coffee grounds drawer and the drip tray. Close the service door.

10.5 Cleaning the Brew Group with "Coffee Clean Tablets"

Besides weekly cleaning, we recommend running the cleaning cycle with "Coffee Clean Tablets" after approximately 500 cups of coffee or once a month.
This operation completes the maintenance process of the brew group.

Both the "Coffee Clean Tablets" used to clean the Brew Group and the "Maintenance Kit" may be purchased at your local dealer or at authorised service centres.

Warning: The "Coffee Clean Tablets" has no descaling property. For descaling use the Saeco descaling solution and follow the procedure described in the "Descaling" chapter.

The wash cycle cannot be stopped. Do not leave the machine unattended during this operation.

Warning! Drinking the solution dispensed during this procedure is strictly prohibited. The solution must be disposed of.

1 Enter the programming mode as described in section 9.1.

2 Press the "CLEAN" button (24) and select the "MACHINE MENU" option; press the "" button (18) to enter the menu.

3 Press the "CLEAN" button (24) and select the "MAINTENANCE" option.

MACHINE MENU
DISPLAY MENU
WATER MENU
MAINTENANCE
FACTORY SETTINGS

4 Press the "" button (18) to access the menu.

MAINTENANCE
BREW GROUP CLEAN
DESCALING
CAPPUCCINATORE CLEANING

5 Press the "" button (18) to start the Brew Group cleaning cycle.

BREW GROUP CLEAN
PERFORM BREW
GROUP CLEANING?
ESC NO OK YES

Note: If this option is confirmed the cycle must be completed. Press the "" button (23) to exit.

6 Press the "" button (18) to start the group cleaning cycle.

BREW GROUP CLEAN
EXTRACT BREW GROUP
OK

7 Remove the drip tray and the group compartment drawer.

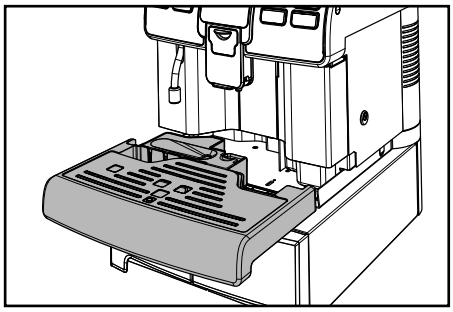

8 Open the service door with the supplied key.

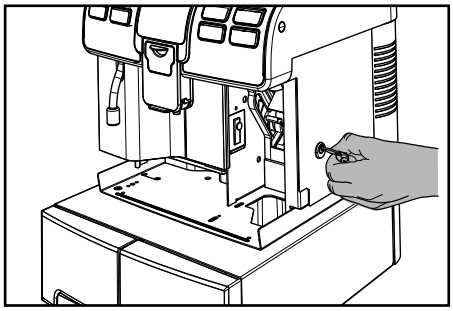

9 Remove the Brew Group: Pull it by the handle and press the «PRESS» button.

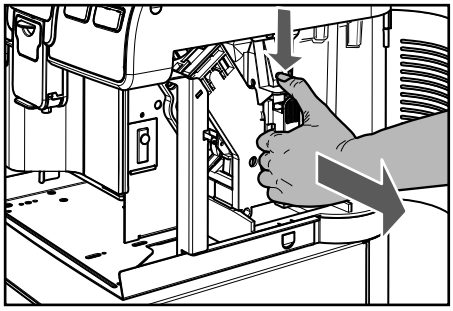

10 Press the "☕" button (18) to confirm the removal of the Brew Group.

BREW GROUP CLEAN
INSERT GROUP
CLEAN TAB
OK

11 Place the cleaning tablet in the Brew Group and refit the group in the machine, making sure that all the components have been inserted and that the door is closed.

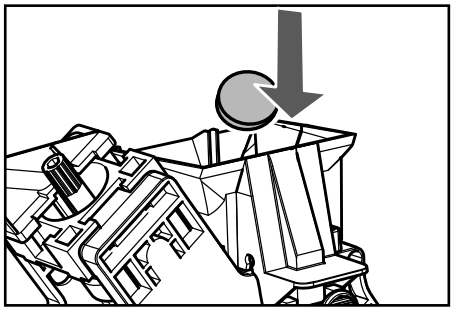

12 After placing the tablet in the brew group press the "☕" button (18) to confirm.

BREW GROUP CLEAN
PLACE A CONTAINER
UNDER THE
DISPENSING SPOUT
OK

13 Place a container under the coffee dispensing spout and press the "☕" button (18) to confirm.

BREW GROUP CLEAN

14 The machine completes the cycle automatically.

Note: At the end of the cycle the machine goes back to its normal operating mode. We recommend removing the group and washing it under fresh running water.

10.6 Brew Group Lubrication

Lubricate the Brew Group after approximately 500 cups of coffee or once a month.

The grease to lubricate the Brew Group and the complete "Service Kit" may be purchased at your local dealer, or at authorised service centres.

Note: To display the number of coffee cups brewed, please refer to the "COUNTERS" menu in the "BEVERAGE MENU" (section 9.4 - page 36).

Before lubricating the brew group clean it under running water as described in the "Brew Group - Weekly Cleaning" section.

1 Lubricate the brew group guides using the Saeco grease only.

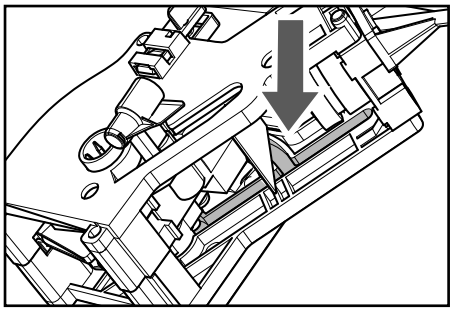

Apply the grease evenly on both side guides.

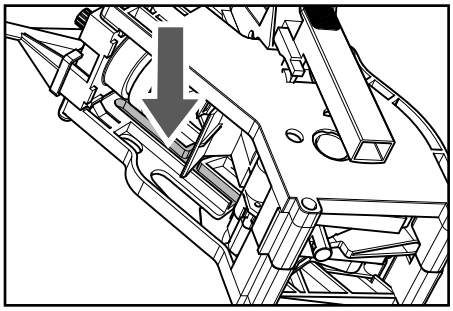

2 Lubricate also the shaft.

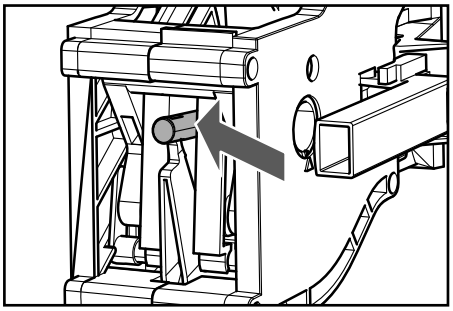

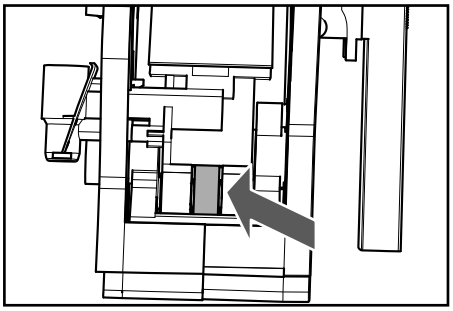

3 Insert the Brew Group back into its seat until it locks into place, WITHOUT pressing the "PRESS" button.

4 Insert the coffee grounds drawer and the drip tray. Close the service door.

10.7 Descaling

Limescale is a natural part of the water used for machine operation. It needs to be removed regularly as it may clog the water and coffee circuit of your appliance.
The advanced electronics shows on the machine display (in clear symbols) when descaling is needed. Just follow the steps described below.

This operation needs to be carried out before the appliance stops working properly, as in this case the repair is not covered by the warranty.

Use the Saeco descaling product only. Its formula has been designed to ensure better machine performance and operation for its whole operating life. If correctly used, it also avoids alterations in the brewed product.

The descaling solution and the complete "Maintenance Kit" may be purchased at your local dealer or at authorised service centres.

Warning! Never drink the descaling solution or any products dispensed until the cycle has been carried out to the end. Never use vinegar as a descaling solution.

1 Turn on the machine by pressing the ON/OFF button. Wait for the machine to finish its rinse and warm-up process.

Warning! Remove the "Intenza" filter before adding the descaling solution.

2 Enter the programming mode as described in section 9.1.

3 Press the "CLEAN" button (24) and select the "MACHINE MENU" option; press the "" button (18) to enter the menu.

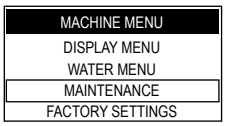

4 Press the "CLEAN" button (24) and select the "MAINTENANCE" option; press the "" button (18) to enter the menu.

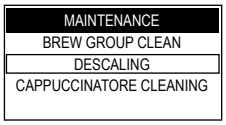

5 Press the "CLEAN" button (24) and select the "DESCALING" option; press the "☕" button (18) to enter the menu.

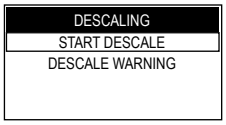

6 Select the "START DESCALE" option; press the "☕" button (18) to access the menu.

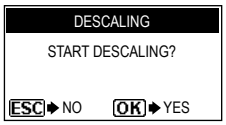

Note: If this option is confirmed, the rest of the cycle must be completed. Press the "★" button (23) to exit.

7 Press the "☕" button (18) to start the DESCALING cycle.

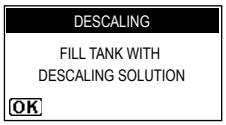

8 Pour the entire content of the Saeco concentrated descaling solution into the water tank and then fill the tank with fresh drinking water up to the level indicated by the icon.

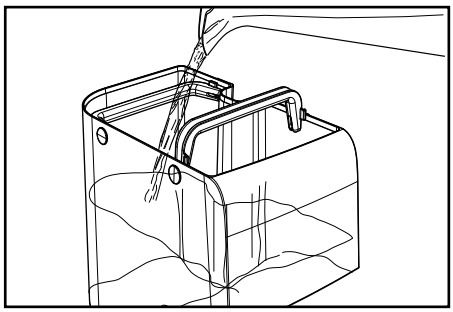

9 Place the tank back in the machine. Press the "☕" button (18).

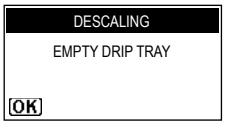

10 Remove any liquids from the drip tray and place it back in the machine.

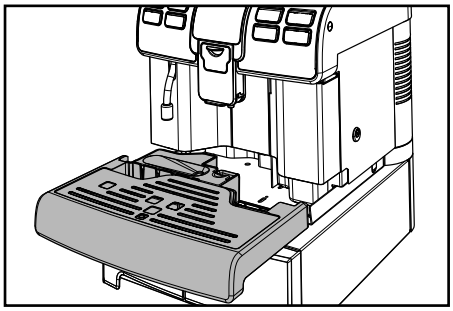

Press the "☕" button (18).

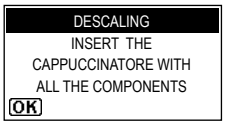

11 Insert the complete Cappuccinatore into the machine and remove the dispensing spout.

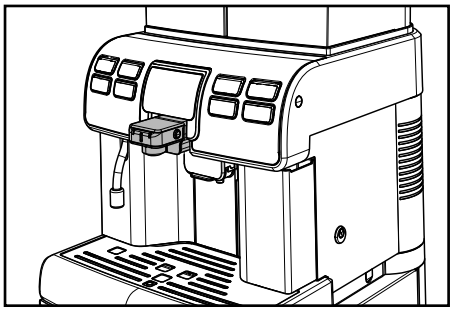

Press the "☕" button (18).

Note: Keep the suction tube removed from the Cappuccinatore while the descaling cycle is performed.

DESCALING
PLACE A CONTAINER
UNDER MILK AND HOT
WATER SPOUTS
OK

12 Place a container under the hot water wand and a large enough container under the Cappuccinatore.

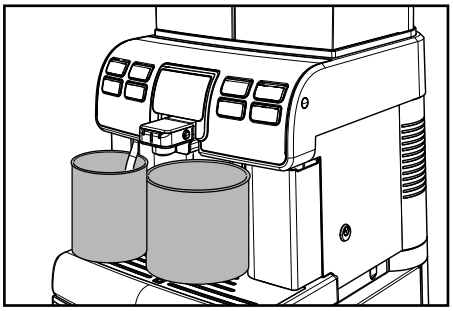

Note: Use a container of at least 1.5 litres capacity.

Press the " " button (18).

DESCALING
STEP 1/2 DESCALING
ESC PAUSE

If you do not have a container of this capacity, pause the cycle by pressing the " " button (23), empty the container, place it back in the machine and re-start the cycle by pressing the " " button (18).

13 At this point, the machine will start dispensing the descaling solution at intervals (the bar shows the cycle progress).

14 When the solution in the tank is finished, the machine requests to empty and rinse the tank with fresh drinking water.

DESCALING
RINSE TANK &
FILL WITH FRESH WATER
OK

15 Rinse the water tank thoroughly and refill it with fresh drinking water.

16 Insert the tank into the machine. Press the " " button (18).

17 Empty the containers used to collect the liquid dispensed by the machine.

DESCALING
EMPTY DRIP TRAY
OK

18 Remove any liquids from the drip tray and insert the tray back.
Press the " " button (18).

DESCALING
INSERT THE
CAPPUCCINATORE WITH
ALL THE COMPONENTS
OK

19 Check that the Cappuccinatore is placed in the machine.
Press the " " button (18).

DESCALING
PLACE A CONTAINER
UNDER MILK AND HOT
WATER SPOUTS
OK

20 Place a container under the hot water wand and a large enough container under the Cappuccinatore.
Press the " " button (18).

DESCALING
STEP 2/2 RINSING
ESC PAUSE

21 The machine performs the rinse cycle.

Note: A default amount of water is needed for the rinse phase. This allows an ideal rinse cycle to be performed in order to ensure the best conditions to brew products. The message about filling the tank for the rinse cycle is normal, as it is part of the procedure.

Note: The rinse cycle can be paused by pressing the " " button (23). To resume the cycle, press the " " button (18) again. This allows you to empty the container or to stay away from the machine for a short period of time.

22 Once the rinse cycle is complete, the machine carries out the warm-up and rinse cycle to be ready for product brewing.

23 Empty the containers used to collect the liquid dispensed by the machine and reassemble the dispensing spout.

24 The machine is now ready for use.

Note:

- **The descaling solution must be disposed of according to the manufacturer's instructions and/or regulations in force in the country of use.**
- **After completing the descaling cycle:**
  1. **Wash the brew group as described in the "Brew Group" section in the "Cleaning and Maintenance" chapter;**
  2. **Rinse the Cappuccinatore under running water.**

When the descaling cycle is complete, we recommend emptying the drip tray.

11 MACHINE DISPOSAL

- The packing materials can be recycled.
- Appliance: Unplug the appliance and cut the power cord.
- Deliver the appliance and power cord to a service center or public waste disposal facility.

This product complies with eu directive 2002/96/EC.

The symbol on the product or on its packaging indicates that this product may not be treated as household waste. Instead it shall be handed over to the applicable collection point for the recycling of electrical and electronic equipment.
By ensuring this product is disposed of correctly, you will help prevent potential negative consequences for the environment and human health, which could otherwise be caused by inappropriate waste handling of this product. For more detailed information about recycling of this product, please contact your local city office, your household waste disposal service or the shop where you purchased the product.

12 TROUBLESHOOTING

Machine actions	Causes	Solutions
The machine does not switch on.	The machine is not plugged and/or the power button is positioned on "0".	Plug the machine and/or switch the power button to "I".
Coffee is not hot enough.	The cups are cold.	Preheat the cups with hot water.
Coffee does not have enough crema. **(See note)**	The blend is unsuitable, coffee is not freshly roasted or the grind is too coarse.	Change coffee blend or adjust the grind as explained in section "Adjusting the Coffee Grinder".
The machine takes a long time to warm up or the amount of water dispensed from the wand is too little.	The machine circuit is clogged by limescale.	Descale the machine.
Bubbles form at the Cappuccinatore spout while dispensing milk.	The tube fittings are not connected properly or are not completely inserted into the Cappuccinatore.	Insert the whole suction tube into the Cappuccinatore.
Steam comes out of the Cappuccinatore when sucking milk.	There is no more milk in the container.	Check that there is still milk. If necessary, fill in the milk container again or replace it with a new one.
The Brew Group cannot be removed.	The Brew Group is out of place.	Turn the machine on. Close the service door. The brew group automatically returns to the initial position.
	Group compartment drawer inserted.	Remove the group compartment drawer before removing the brew group.
The machine grinds the coffee beans but no coffee comes out. **(See note)**	The Brew Group is dirty.	Clean the Brew Group ("Brew Group" section).
	The dispensing spout is dirty.	Clean the dispensing spout.
Coffee is too weak. **(See note)**	Too low dose	Adjust the amount of coffee to be ground.
Coffee is brewed slowly. **(See note)**	The coffee grind is too fine.	Change coffee blend or adjust the grind as explained in section "Adjusting the Coffee Grinder".
	The Brew Group is dirty.	Clean the Brew Group ("Brew Group" section).
Coffee leaks out of the dispensing spout.	The dispensing spout is clogged or in the wrong position.	Clean the dispensing spout and its holes. Position the dispensing spout correctly.

Note: These problems can be considered normal if the coffee blend has been changed or if the machine has just been installed.

Please, contact our consumer care help line at the phone number listed at the last page of this document for any problems not covered in the above table or when the suggested solutions do not solve the problem.

02

15002812 - Rev.02 del 15-06-12

EN

02

The manufacturer reserves the right to make changes without prior notice.

Saeco